

© MHI Vestas Offshore Wind

energy CLUSTER DENMARK

RECOMMENDED PRACTICE & GUIDELINE

PLANNING AND EXECUTION OF OFFSHORE WIND LIFTING OPERATIONS

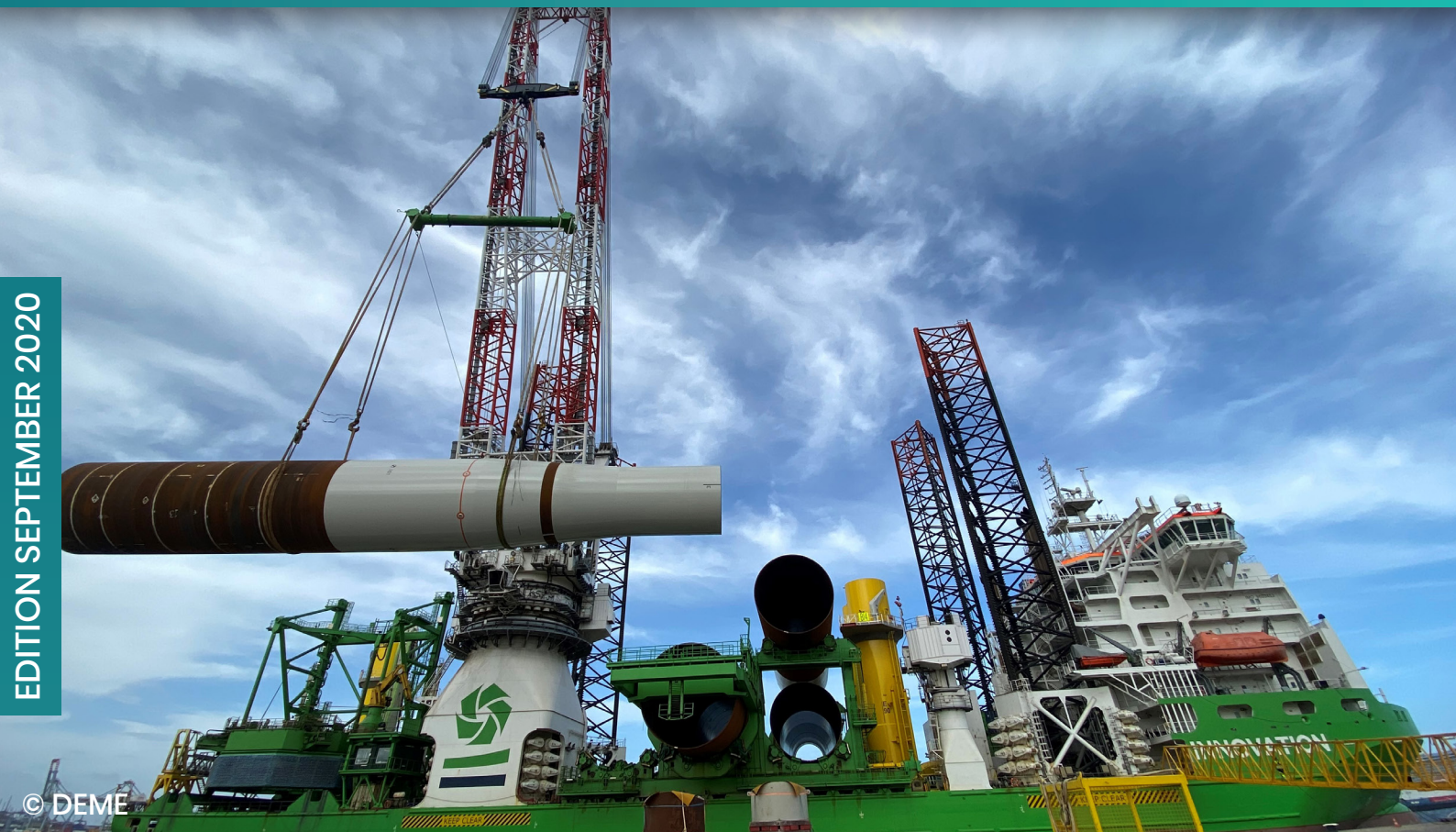

© DEME

EDITION SEPTEMBER 2020

TABLE OF CONTENTS

1. Purpose and Scope 3
2. Background 4
3. Management of Lifting Operations 5
4. Planning of Lifting Operations 6
4.1. Objectives of the lifting operations 6
4.2. Characteristics of the load 6
4.3. Lifting Equipment 6
4.4. Load Control and clearances 6
4.5. Classification of lifting operations 7
4.5.1. Class One – Basic Routine, Repetitive Lifts 7
4.5.2. Class Two - Intermediate, Complicated, Complex lifts 8
4.6. Identification of Hazards and Risk Assessment 9
4.6.1. Suspended Loads 10
4.7. Resources 12
4.8. Lift Plan 13
4.9. Permit-to-work 14
5. Organization of Lifting Operations 14
5.1. Selection and training requirements of Personnel 14
5.2. Drug alcohol and substance misuse policy 16
5.3. Marking of Lifting Equipment 16
5.4. Storage of Lifting equipment 16
5.5. Records 17
5.6. Inspection, Examination and Testing 18
5.6.1. General 18
5.6.2. Regular checks 18
5.6.3. Periodical Inspection 19
5.6.4. Inspection of lifting equipment not in regular use 19
5.7 Contractual Considerations 19
6. Control of the lifting operations 20
7. Execution of Lifting Operations 21
7.1. All Stop 21
7.2. Good Practice Prior to Lifting 21
7.3. Pre-Task Brief 23
7.4. Communications 23
7.5. Good practice During Lifting 25
7.6. Environmental (Weather) Conditions 25
7.7. Personal Protective Equipment (PPE) 27
7.8 Management of Change 27
8. Safe use of Lifting Appliances and Load Control Systems 28
8.1. Installation Vessel cranes 28
8.2. Support Vessel cranes 29
8.3. Lifting equipment used for Lifting Persons 29
8.4. Winches for Load Control 30
8.5. Mobile Cranes 30
8.6. Davit and Nacelle Cranes 32
8.6.1. Training and competence 32
8.6.2. Maintenance, inspection and thorough examination 32
8.6.3 Planning 32
9. Review of Lifting Operations 33
10. Appendix 1 - Abbreviations and Definitions 36
10.1. Abbreviations 36
10.2. Definitions 37
11. Appendix 2 - Changes 43
12. Appendix 3 - Roles & Responsibilities and Competence Requirements 45
13. Appendix 4 - References 47
14. Appendix 5 - CNTR-SMP-LP-01 Crane Lift Plan (Combined Sample) 48



© Jan de Nul

1. Purpose and Scope

The purpose of this guideline is to establish minimum requirements for lifting operations in the offshore wind industry by collating existing and relevant industry guidance.

The consequences of incidents in lifting operations can be significant and as a result it is desirable to minimize lifting operations. However due to the nature of the operations, lifting will remain a key activity in offshore wind which in turn require the industry's attention. Updated incident statistics can be found at G+, global offshore wind health and safety organization's website: www.gplusoffshorewind.com. At the time of writing the incident numbers underline the importance of focusing on repetitive lifts e.g. davit cranes in the operation phase among other things.

Safety should not be an area of competition, but an area where everyone involved in the supply chain share best practice for a uniform high level globally. This document has been made to facilitate and capture knowledge sharing across the supply chain. The worlds first offshore wind farm was installed in 1991 and had 11 turbines and a total capacity of 5 MW. In these early days it made sense for the industry to base lifting guidelines on good practice from other industries and general documents. Today the number of installed turbines is counted in triple digits, the total capacity (in GW) in double digits across many countries. Future scenarios point to significant increase in the installation in many parts of the world. Many lessons have been learned in the course of installing and maintaining the wind farms which are in operation today. This document attempts to capture and present them so new employees, companies, organizations and countries can learn them the easy way – reducing both risk and cost.

General lifting forums such as IMCA are well regarded in terms of their guidance on lifting. They have vast experience of providing this and it is a core part of the association, with a well-established working group. General documents such as IMCA's "Guidelines for Lifting Operations" provide comprehensive guidance on lifting operations. This document is differentiated by only focusing on the lifting operations carried out in the offshore wind industry. Because it only focuses on offshore wind, experience and good practice and can more easily be shared in the document – and it is the aspiration that it will be more easily accessible as a result. Abbreviations and definitions can be found in appendix 1.

The scope of this guideline is to provide stakeholders within the offshore wind industry with requirements and guidance for planning and undertaking lifting operations. Various aspects of lifting operations, such as planning, inspection, maintenance, competency etc. are considered in order to minimize associated risks and to improve health and safety relating to lifting operations.

This guideline is applicable for all lifting operations in offshore wind, i.e. all operations concerned with the lifting or lowering of a load using a lifting appliance such as a crane, winch, davit, forklift etc. It covers, but is not limited to:

- lifting operations carried out on land and at sea
- large objects such as nacelles, foundations etc. and small objects such as pallets, lifting bags etc.
- the installation phase and the operation and maintenance phase
- one-off operations such as substation installation and repetitive lifts such as lifting bags with tools

Local legal requirements must always be considered and should any contradictions occur between this guideline and the applicable local regulations, then local legislation shall take precedence. If, however, the guideline requires a higher standard than local legal requirements, then the guideline should be applied thereby positively contributing to the local requirements.

2. Background

The need for a recommended practice on wind turbine lifting operations was discussed and confirmed at a workshop in December 2016. Following this, the idea was included as a project in the wind partnership originally formed by Siemens Gamesa, MHI Vestas Offshore Wind and Vestas Wind Systems, on Energy Cluster Denmark's initiative.

During 2017 and 2018 a project group prepared this document based on their accumulated knowledge of the field. The document has since been updated with support both original and new contributors.

Contributors

- Siemens Gamesa Renewable Energy
- MHI Vestas Offshore Wind
- Ørsted
- Vattenfall
- Equinor
- Mammoet Wind
- Fred Olsen Wind Carrier
- Blue Water Shipping
- DEME
- G+
- Jan de Nul
- EDF
- Vento Maritime

Interreg North Sea Region Inn2POWER European Regional Development Fund
EUROPEAN UNION

The process was facilitated by Energy Cluster Denmark (then Offshoreenergy.dk) and the Transport Innovation Network, represented by Maritime Development Centre and Force Technology. The project was funded by the Danish Agency for Science and Higher Education for the first version and the Interreg north sea region fund for the second version. An overview of changes can be found in 11 Appendix 2 – Changes



3. Management of Lifting Operations

A safe system of work shall be established and maintained by the Competent Person. The system shall be followed for every lifting operation, whether it is a complex individual lift or repetitive routine operations.

The main principles of the safe system of work is that any lifting operations shall be:

- Properly planned;
- Well organised;
- Appropriately supervised;
- Carried out in a safe manner;
- Closed and reviewed.

The objective of the safe system of work is that all hazards associated with and all factors affecting lifting operations are duly considered, communicated, well understood and controlled by the personnel involved in the lifting operations.



4. Planning of Lifting Operations

All lifting operations shall be planned and risk assessed prior to commencement to ensure safe execution. The planning and assessment shall be performed by the Competent Person.

Planning of any lifting operations should at least address the following subjects:

- Objectives of the lifting operation
- Characteristic of the load
- Lifting equipment
- Classification of lifting operation
- Identification of hazards and risk assessment
- Resources
- Preparation of Lift Plan
- Application of Permit-to-Work System

4.1. Objectives of the lifting operations

Lifting operation objectives will define the amount of planning required, so lifting operations with objectives of turbine component installation will normally require more thorough planning compared to lifting of a pallet for offloading a truck for example.

4.2. Characteristics of the load

Characteristics of the load to be lifted, such as weight, shape, position of CoG, availability of lifting points, etc. play an important role in the planning of lifting operations.

4.3. Lifting Equipment

The correct selection of lifting equipment by the Competent Person will ensure that the equipment is suitable with regards to the objectives of lifting operations, characteristics of the load to be lifted, load travel path, frequency of use and the operational environment.

Lifting accessories must be compatible with the load and lifting appliance and be used in a safe manner.

4.4. Load Control and clearances

Means for controlling the load in a horizontal direction must be planned as required, such as traverse systems, tag lines with or without capstan winches, guides, bumpers, remote CCTV systems, etc.

When planning lifting operations on an installation jack up vessel or a floating vessel attention should be paid to the mode in which she will be operated. In general, when the vessel is used as an elevated platform then smaller clearance may be sufficient between the main components and/or other obstacles. However, if the vessel is

operating in dynamic conditions i.e. floating lifting operations then larger clearances between main components may be necessary as well as other control measures such as guides, tag lines etc. as detailed by the lift plan and risk assessments.

4.5. Classification of lifting operations

Classification of lifting operation will determine the requirements to personnel, procedures and supervision. The competent person is responsible for determining the classification, the lift is always determined based on a concrete assessment.

4.5.1. Class One – Basic Routine, Repetitive Lifts

This classification includes lifting operation where the load characteristics are considered straightforward and there are no significant hazards within the working area or on the access route for the crane to the working area. All personnel involved with repetitive lifting operations should ensure that complacency is not allowed to develop.

Examples of Class one lifting operations are:

- Lifting of standardized goods; intended and suitable for safe lift (e.g. pallets, containers)
- Lifting of loads with CoG and Gross weight known or easily estimated
- Operations where standard rigging and slinging practices can be applied
- WTG Foundation Davit crane lifts of e.g. pallets
- Nacelle crane lifts of e.g. lifting bags



© MHI Vestas Offshore Wind

The Competent Person must:

- Ensure appropriate information for lift planning is available.
- Assess supervision requirements and include supervision role.
- Ensure a clear definition of roles and responsibilities.
- Clarify if dynamic factors will influence the lifting operations.
- Identify hazards and conduct a risk assessment.
- Prepare the Lift Plan.
- Ensure properly managed inspection and maintenance regime for lifting appliances and lifting accessories.
- Issue a Pre-Task briefing in case of variations or changes.
- Regularly review and correct (as necessary) the Lift Plan.
- Ensure complacent attitude towards repetitive lifting operations is not allowed to develop.

In the case of repetitive or routine operations, assessment and planning may only be necessary in the first instance, with periodic reviews to ensure that no critical factors have been changed.

4.5.2. Class Two - Intermediate, Complicated, Complex lifts

Class two lifts are lifting operations where:

- the crane is used to lift complex loads or persons and significant hazards have been identified either with the load, with the working area or access route of the crane, or
- where two or more cranes are used to lift a load, or
- where the lifting operation is carried out at a location with exceptional hazards.

Examples of class two lifting operations:

- Lifting of loads with unknown Gross weight and CoG. Engineering input required.
- Lifting of complex shape or a load with COG offset or variable lifting point loads.
- Tandem crane lifting.
- Lifting of main components, e.g. hub, generator, nacelle, tower, blade, foundation, transition piece, Offshore Substation.
- Operations where standard rigging and slinging practices do not apply. Engineering input required.
- Conducted in difficult or restricted areas.



© DEME

The Competent Person should:

- Ensure appropriate information for lift planning is available.
- Nominate the Crane Supervisor for the task
- Clarify if and what dynamic factors will influence the lift.
- Identify hazards and conduct risk assessment.
- Prepare the Lift Plan.
- Ensure properly managed inspection and maintenance regime for lifting appliances and lifting accessories.
- Seek out engineering support and specialist knowledge, where necessary.
- Produce detailed planning lifting drawings.
- Ensure rigging instructions are in place.
- Produce appropriate documentation for briefings.
- Carry out audit and review of lifting operations.
- Review and correct the Lift Plan.
- Support the Lifting team when requested

4.6. Identification of Hazards and Risk Assessment

A lifting operation may have many hazards associated with it, either due to the load, the direction or path of the load, the lifting appliances and accessories used, the environment in which the lifting operation is being carried out or its proximity to other components, objects or other items or hazards.

Table 1 lists examples of hazards which can be encountered during lifting operations

Load	Environment	Proximity to
Position of CoG, incl. unknown position	Snow	Main components
Location and type of lift points	Ice	Adjacent vessels
Complex slinging arrangements	Hail	Vessel structures (crane structure, jack-up legs, masts, accommodation)
Use of load control systems	Rain	Roads
Uncertainty in weight of load	Wind	Rail
Two crane lifting operations	Lightning	Passing vessels
Integrity of load	Sea state	Adjacent cranes, MEWPS or other plant and equipment
Load dynamics, floating, in port or in field	Fog	Temporary works (e.g. scaffolding)
High surface area and drag coefficient	Uneven ground	Proximity to quayside
Weight transfer	Poor ground conditions	Mooring lines
Axle load transfer	Poor seabed conditions	Permanent and temporary lighting
Orientation of the load		Power lines
Access to lift points and rigging		Personnel
Sharp edges		Underground utilities
Protruding load parts		Ducts
		Sewage
		Cellars
		Pipelines

Table: 1 Hazards

Once the hazards associated with a lifting operation have been identified then a risk assessment should be developed using the hierarchy of risk control. The risk assessment shall define measures to be applied to eliminate or reduce the risks to an acceptable level.



© MHI Vestas Offshore Wind

4.6.1. Suspended Loads

Working under suspended loads is considered high risk. It is important to define and segregate the load, the lifting appliance and the lifting accessories. Lifting accessories maybe large heavy items e.g. blade yoke, tower gripper, spreader beams, heave compensators etc. They are specially designed and calculated to lift predefined loads/components. By design these accessories may carry with them their own associated hazards and should be risk assessed on an individual basis

The drawing below specifies the components of a load case.

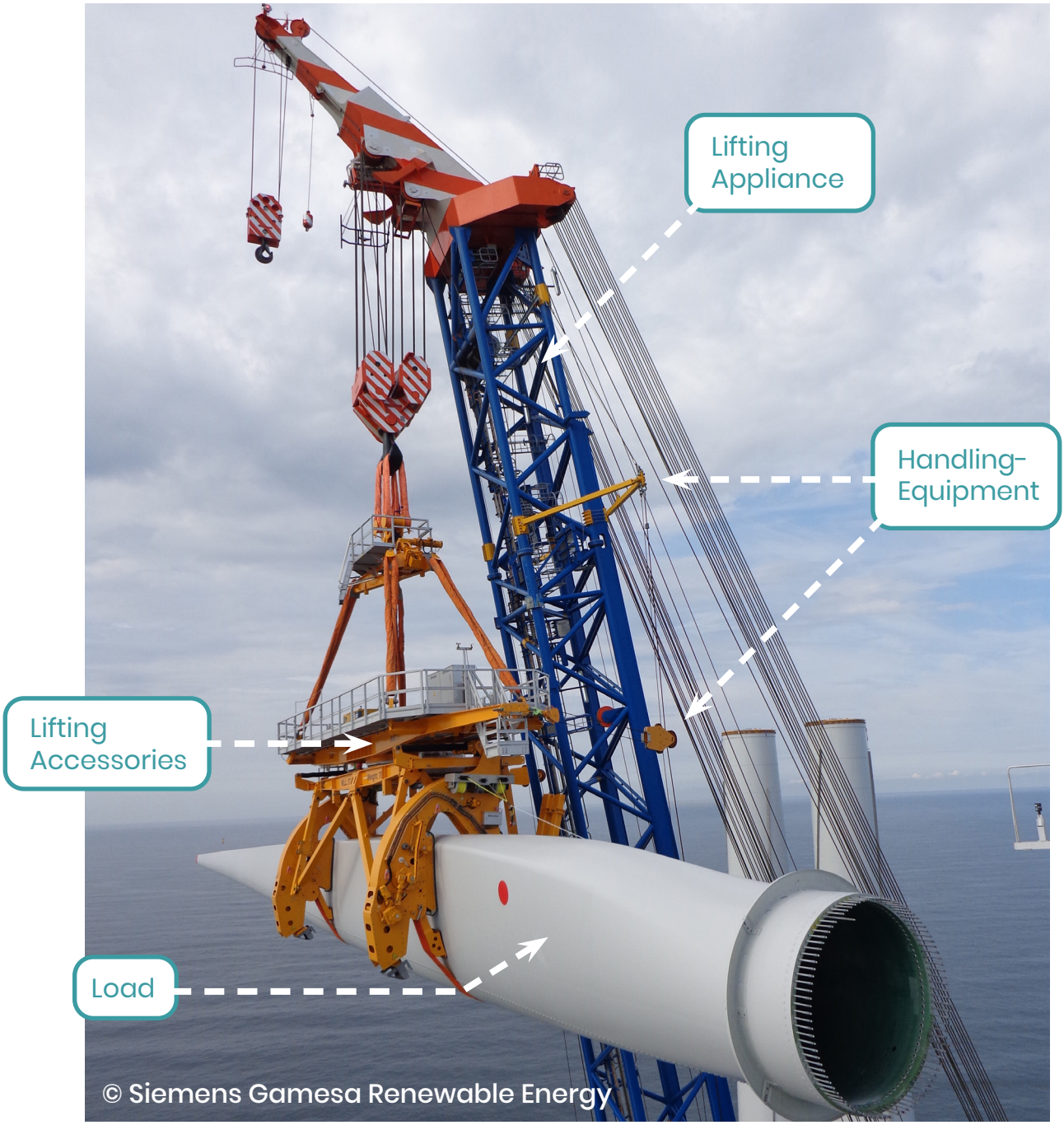

Lifting Appliance: Holding device e.g. vessel crane, shore crane etc.

Lifting Accessories: Equipment placed between the holding device of lifting appliance and the load.

Load: Component + transport equipment (if connected) e.g. cradle

Handling Equipment: Tugger lines, traverse systems etc. for handling purpose only.

When working with suspended loads the following must be observed:

Where feasible, loads should not be carried or suspended over areas occupied by persons.

Where this is not feasible only full engineered lifts according section 4.5.2. (Class Two - Intermediate, Complicated, Complex lifts) and additional control measures should be considered.

Establish a safe system of work which minimizes the risks to persons who may need to be below or in close vicinity to the load and prevents access by unauthorized persons.

Possible preventive control measures can be, but are not limited to:

- Limit the number of personnel
- Clean down and removal of loose items prior to lift
- Safe zones
- Camera based guidance systems
- The verification of the strength of the structure to be lifted, including the strength of the lift points.
- Verification of crane capacity
- The lifting accessories e.g. rigging arrangement, including slings, shackles and any spreader frames or beams, and the certification/ verification of each components.
- The management structure for the operations and Management of Change procedures.
- Risk assessments, HAZOP /HAZID studies involving key personnel of all relevant parties.
- Bumper systems
- Utilization and safety factors according international standards
- Lifecycle of equipment and inspection, in particular with repetitive lifts needs to be defined

To repeat: where feasible, loads should not be carried or suspended over areas occupied by persons.

4.7. Resources

Subject to the classification and nature of the planned lifting operation the Competent Person should decide on the required roles and personnel of the lifting organization.

A lifting organization will generally have the following roles: Competent Person, responsible person or Crane Supervisor, lifting appliance operator, slinger and signaller. One person can perform more than one role, if it's reasonably to do so, e.g. the signaller and slinger roles can be assigned to one person or a team.

Roles, responsibilities and competence requirement for the necessary skills, experience, knowledge and of the lifting organization personnel are described in Appendix 1 to this recommended practice.

The Contractor organization must provide adequate resources for the Competent Person to carry out their duties and perform a safe lifting operation.

4.8. Lift Plan

The Lift Plan or Lifting Procedure, are written method statements of an individual or repetitive lifting operation. The contents of the Lift Plan will depend on the complexity of the lifting operations, see classification of lifts above. The Lift Plan must detail the requirements to ensure that the lifting operations are carried out safely and in compliance with all relevant local legal legislation.

The Lift Plan shall include details, as a minimum, of the following:

- Associated risks and mitigations
- Characteristics of the load
- Check lists
- Communication
- Configuration and load charts of the lifting appliances / cranes
- Contingency plans
- Description of the operations
- Lifting accessories details
- Limiting environmental criteria for each lift
- Number of personnel
- Organisation, roles and responsibilities
- Personnel proximity to the load
- Planning drawings (if required)
- Rigging instructions
- Safe zones
- Suspended loads

For an example lift plan see Appendix 5 – CNTR-SMP-LP-01 Crane Lift Plan (Combined Sample).

Should the lifting operation require changes to the approved method statement/Lift Plan, then the Competent Person and Crane Supervisor should follow an approved Management of Change procedure, to control and assess the impact of those changes, prior to the lift.



4.9. Permit-to-work

Lifting operations usually form part of a transportation, assembly or construction process and therefore it is usually required that they are executed under a Permit-to-Work system. Lift Plans shall clearly state the pre-conditions to be fulfilled for attaining the Permit-to-Work.

5. Organization of Lifting Operations

The following shall be considered when organizing a lifting operation:

- Selection and training requirements of personnel
- Drug, alcohol and substance misuse policy
- Proper marking of lifting equipment
- Storage of lifting accessories
- Inspection and maintenance regime of lifting accessories
- Contractual considerations

5.1. Selection and training requirements of Personnel

Safe lifting operations depend upon the selection of suitable personnel who are competent to carry out the required duties. Records of training and experience assist in the selection of suitable personnel as responsible person, Crane Supervisor, crane / lifting appliance operator, slinger and signaller.

All personnel who are involved in lifting operations, or in the maintenance of lifting equipment, shall be trained and competent to safely carry out their tasks within their area of responsibilities. All personnel who are involved in lifting operations, shall be certified to GWO or a mutually agreed equivalent. Local legal requirements should always be adhered to.

Relevant training can be performed internally or under the direction of an external training provider. The purpose of the training is that defined by the organization requirements are fulfilled, and any applicable local legislative requirements are covered.

The method of teaching should be decided by the training organisation. Methods may include for example, classroom training, simulated practical training or hands-on training.

Where practical training is performed, this shall be performed on lifting appliance that is either the same or a similar type (e.g. mobile, crawler, davit, knuckle boom crane, etc.) to generally used or planned lifting appliance on projects and sites.
Records of competence (e.g. certification) for all personnel, including contracted employees, who have a role in the lifting operation, i.e. lifting appliance operator, slinger, signaller, shall be readily accessible on request to the crane supervisor at the location where the lifting operation is to be performed.
Personnel under training should only undertake duties within their current level of assessment by the Competent Person and then only under supervision of a qualified person.

Periodic assessment and refresher training shall be conducted at intervals in not exceeding periods stated by the training organization course requirements, to ensure the necessary level and standard of training is maintained. The period should not exceed 5 years.

Cranes should only be operated by personnel with operator's license. For vessel crane operators, training courses for in depth knowledge of the specific type of cranes is required. The training for vessel cranes should include technical rudiments of design sensitivities and limitations including effects of dynamic loading, dual operations of ballasting and lifting operations, crane stiffness effects, protection and safety systems, man baskets, failure sequence of structural and mechanical elements.

Power operated lifting appliances such as davit cranes, nacelle cranes, quay side cranes, winches etc. shall only be operated by personnel with operator's license and trained in accordance with manufacturer's recommendation.

Simple lifting appliances like manual and simple power-driven winches and hoists should only be operated by personnel having a qualification as a signaller or slinger with additional suitable training where necessary.

Operators of remote tagline systems shall have in depth knowledge of the system and be adequately trained.

Operators of davits shall be trained in accordance with manufacturer's recommendations and the operating company's internal procedures.

Qualifications for signaller and slinger shall be in accordance with relevant defined standards, requirements of the employing organization and internal requirements of contractor (their employing company). The signaller and slinger shall be trained in inspection, safe use and storage of lifting accessories and operation of signaling systems (visual and radio communications). Proficiency shall be demonstrated by a certificate and the competency periodically assessed.



© MHI Vestas Offshore Wind

5.2. Drug alcohol and substance misuse policy

Work associated with lifting operations should not be carried out by personnel whose efficiency is impaired by alcohol, drugs or other influences. All personnel in the lifting team should be aware of the policy. Regular unnotified checks of the lifting team may be undertaken by the employing organization or other party, such as vessel operator.

5.3. Marking of Lifting Equipment

All lifting appliances and lifting accessories shall be clearly and permanently marked on the individual lifting equipment by stamping, metallic plate, tagging or RFID. The marking should not interfere with the WLL or effectiveness of the lifting equipment.

All lifting appliances and lifting accessories must be clearly marked to indicate their WLL - the maximum load the equipment can safely lift.

Where the WLL of any lifting appliance depends on its configuration, the information provided on the WLL must reflect all potential configurations. In some cases, the information should be kept with the lifting appliance, e.g. the rated capacity indicator fitted to a lifting appliance, showing the operator the WLL for any of the lifting appliance permitted lifting configurations.

Lifting accessories must also be marked to show any characteristics that might affect their safe use. This may include the weight of the parts, where their weight is significant.

All lifting equipment shall have its unique identification number robustly attached to the lifting equipment.

Where the unique identification or the WLL cannot be established, the equipment shall not be used for any lifting operation until verified and the requirements of this operations are fulfilled.

Where equipment is specifically designed to be used for lifting people, it must be marked to indicate the number of people that can be lifted in addition to the WLL of the equipment. The crane used shall also be certified for manriding.

5.4. Storage of Lifting equipment

Any lifting appliance when not in use shall be parked, stored and preserved as per manufacturer's instructions. Unauthorized movement or use of lifting appliances shall always be prevented.

When not in use, lifting accessories shall be stored in suitable and sufficient facilities. When practical, lifting accessories shall have dedicated storage areas to prevent damage or deterioration, e.g. storage rack or container.

Lifting appliances and accessories that are out of certification shall be stored separately and quarantined to prevent accidental use.

The storage facility, where practical, should provide:

- Dry atmospheres to prevent rusting, i.e. protection against weather elements.
- Separation of chemicals that could have a corrosive effect.
- Storage of material (fibre) slings out of direct sunlight and away from sources of heat.
- Protection from attack by rodents for fabric items of accessory.

Any specific storage requirements, as defined by the manufacturer or supplier of the lifting accessory must be adhered to.



There may be instances where accessories are stored open to the weather elements for a short period of time. In such cases, suitable cover should be utilized to protect the accessories. Storage of lifting tools and slings of main components are usually too large to store inside on the vessel. These should be specifically designed to allow storage on deck of installation vessels for the duration of the project.

5.5. Records

All records for lifting appliance shall be kept while the equipment is in service and be readily available for the responsible person and other relevant personnel upon request. Lifting equipment must be provided with the following records:

- Test certificates, records of thorough examinations and inspections, including ropes and chains, carried out (whether statutory or not).
- Records of significant repairs and modifications to the cranes, hoists, etc.

  including renewal of major parts and confirmation of completion including the signatures of responsible persons.

All records for lifting accessories shall be kept in paper or digital format and be readily available for the responsible person and other relevant personnel upon request.

5.6. Inspection, Examination and Testing

5.6.1. General

Prior to first time use on the installation, fixed lifting equipment, e.g. a WTG foundation Davit crane, shall be inspected and examined by a competent person to verify that the lifting equipment is properly mounted, commissioned and prepared before taking into use. Local legislation may define that the Davit crane is proof load tested in situ and that notified body or accredited 3rd party is stipulated to witness the test and should therefore be considered. These requirements are in addition to any testing undertaken by the manufacturer at the manufacturer's site. It is important to clarify that the competent person referred to in this paragraph is not the Competent Person lifting as per definition.

Additional non-standard equipment added to crane boom will need approval from the crane manufacture and to be checked by a competent person once fitted. The person carrying out this inspection should not be the same person(s) or organisation that installed it (best practice). They should be sufficiently independent to allow an impartial judgement to be made of the work. If a vessel engineer carries out this task then they should be of sufficient seniority i.e. Chief Engineer to have adequate competence and should not delegate the task to junior personnel.

The results of inspections and examinations should be recorded with details of any corrective actions to overcome any defects prior to returning the lifting equipment to service. All documentation verifying the safe use of lifting equipment shall be readily available to the responsible person and other relevant personnel upon request. E.g. cranes on vessels are subject to annual inspection and certification by a Classification Society.

Inspection and examination shall also be performed by a competent organization when lifting equipment is used after long periods of idleness, after major modifications and repair.

Transit lifting equipment and newly bought or hired lifting equipment shall be inspected for compliance with statutory requirements.

Equipment that failed an inspection or examination shall be quarantined by lockable means or appropriately destroyed so that it can no longer be used. This includes the periodic inspections required by applicable national legislation (e.g. Belgium ~ monthly / exceptions for transit first 3 months). Any such equipment stays on the register until the competent person decides that the equipment is no longer fit for service.

5.6.2. Regular checks

Regular checks (less detailed examination) of lifting equipment includes:

- Operational checks of lifting appliance by the Lifting Appliance Operator, prior to use of the lifting equipment. Check on equipment should be compliant with manufactures recommendations.

- Environmental conditions may determine more regular inspection regimes or more regular than the manufacturers recommendations.
- Lifting accessories visual checks prior to every use.
- Post-use checks of the lifting appliances and lifting accessories to ensure that accessories and equipment are kept in a safe state.
- Routine checks for loose objects to prevent dropped object risk.

5.6.3. Periodical Inspection

Pending on the type of lifting equipment, exposure of environmental effects and operational modes, all lifting equipment shall be periodically inspected by an independent competent organization using competent persons. Periodical inspections (detailed examination) includes:

- Periodic inspections as per relevant statutory requirements
- Regular inspection schedules as prescribed by the manufacturer
- Company specific inspection scheme, based on assessment by a competent organisation of critical elements of the lifting equipment, scheduled adjustments and possible overhaul and maintenance of the equipment.

5.6.4. Inspection of lifting equipment not in regular use

Lifting equipment which has been out of operation for six months, and where use may lead to danger for the health and safety shall be inspected by a competent organization before taken into use.

5.7 Contractual Considerations

The employing organization must determine whether a contractor has the necessary competence to carry out lifting operations in accordance with the statutory and contractual requirements and the recommendations of this guideline. Appointment of the Competent Person and responsible person shall be carried out as agreed in the contract between the employing organization and contractor.

When a lifting operation is contracted as Contracted Lift, the contractor provides the Competent Person, lifting equipment and personnel. The contractor is responsible for operation of a safe system to work – planning, organization and control of the lifting operation.

Where a mobile crane is provided it shall be rigged in accordance with the manufactures guidelines, a competent person must plan the operation. The contractor shall provide trained, competent authorized personnel to rig the crane working to a SSOW.

When the contract is signed for a Hired Lift service, the contractor provides a crane(s) that is properly certified, with competent, authorized, certified crane driver. The employing organization provides the Competent Person and lifting team personnel. The employing organization plans the lifting operation and operates a safe system

of work, including an approved Management of Change procedure.

Combinations of the above main cases are possible.


© Siemens Gamesa Renewable Energy

6. Control of the lifting operations

To ensure effective implementation of the safe system of work, a responsible person (Class One lifts) or Crane Supervisor (Class Two lifts) shall be appointed in writing to control the lifting operations. Under circumstance the role can be performed by the Competent Person.

The appointment of the responsible person or Crane Supervisor does not remove the responsibility from the Competent Person. The Competent Person must be regularly present on site to carry out audits of lifting organization. The presence of the Competent Person on site is recommended during execution of the first complex lifting operations in a repetitive sequence, e.g. first load out and installation of main components. Once the lifting operations are proven to be undertaken safely they may delegate authority, but not their responsibility.

The responsible person or Crane Supervisor shall have adequate training and experience and be competent in administrating duties relating to safe lifting operations including the use, maintenance, repair and renewal of lifting equipment and safety equipment, allocation of responsibilities and instructions to all personnel involved in the lifting operations.

The responsible person is the person who is accountable on site and in charge of the lifting operations. Supervision levels should be defined by the Competent Person, proportionate to the risk and determined by the nature of the work and the competence of the personnel involved.

In lifting operations of Class One the responsible person will usually:

- Conduct a pre-task briefing.
- Verify that Lifting Appliance operator and all other lifting personnel involved are certified and competent
- Ensure that equipment is only operated within the specifications of the user manual.
- Complete or ensure that the visual pre-lift checks are completed.
- Verify that all lifting equipment (lifting appliances and accessories) is certified for use and within inspection regime.
- Establish control of lifting zones and prevention of unauthorized access.
- Supervise the Slingers and signallers

In lifting operations of Class Two a Lift Supervisor will usually:

- Obtain a Permit-to-Work (if required)
- Conduct a pre-task briefing
- Verify the Lifting Appliance operator and all other lifting personnel involved are certified and competent
- Monitor that the Lift Plan is being followed during the complete life cycle of the lifting operation
- Ensure that equipment is operated within the specifications of the user manual.
- Complete and record Pre-lift checklist.
- Complete and record daily lifting log.
- Verify that all lifting equipment is certified for use and within inspection regime.
- Establish control of lifting zones and prevention of unauthorized access.
- Supervise the slingers and signallers.

7. Execution of Lifting Operations

7.1. All Stop

An ALL STOP must be called by anyone observing an unsafe situation. If an ALL STOP is called then all operations must stop immediately. The situation must be assessed prior to work activities recommencing. Depending on the level of the ALL STOP, the competent person may need to be involved.

7.2. Good Practice Prior to Lifting

Prior to commencement of lifting operation, the personnel in charge shall identify and clarify what dynamic or static factors will influence the lifting operation.

Where appropriate, the SWL of a lifting accessory should be reduced to WLL to

consider the environment and mode in which it is being used, termed “derating”. Examples include using sling protection and the way a sling is attached to a load, i.e. the angle of legs and bend radii of the sling type.

When multiple lifting operations occur within the same area, the coordination of these lifting operations must be agreed prior to commencement by the Crane/Lift Supervisors and the operations shall be carried out in line with the Lift Plan.
All preparatory work at the location where the lifting operation takes place is to be completed. The safety of personnel not involved in the lifting operation must be ensured. E.g. the site works that effect crane stability or guano removal from a foundation.

A pre-task briefing must occur prior to the commencement of any lifting operation. The content of the briefing will be dependent on the lift categorization and must cover the details of the lifting operation, responsibilities, site and operational risks control measures. The limitations of the lifting equipment shall be communicated and well understood by all personnel participating in the execution of the lifting operation.

Lifting zones shall be defined by the Lift supervisor prior to commencement of the lifting operation, as these can vary depending on the load, lifting equipment, other objects, walkways, etc. The responsible person or Crane Supervisor shall ensure that all unauthorized persons are kept out of the lifting zone, e.g. by means of barriers, fences, warning tape, signs and/or signaller. This also includes removal and prevention of access of non-essential vehicles or plant, both parked and travelling, inside the lifting zones.



© Siemens Gamesa Renewable Energy

7.3. Pre-Task Brief

Typical information that should be delivered to the lifting team during a pre-task briefing will include, but should not be limited to:

- Ensuring the lifting team is briefed on the operation and aware of the Lift Plan content.
- Applicable planning drawings for the operation.
- Sequence of lifting operations.
- Pick up and lay down positions, travel path and elevation of the load from ground, vessel or structure.
- Means for horizontal control of the load.
- Rigging arrangement. Rigging drawings (if available) for the load.
- Lifting accessories to be used in the operation.
- Pre- and post-use of lifting accessories and appliances.
- Permit to Work, Certificate of Approval and any conditions imposed by them.
- Lifting zones, areas to be closed off to personnel not associated with the operation.
- Hazards associated with the lifting operation.
- Method of communications during the operation.
- Radio frequency, channels to be used, agreed hand signals.
- Weather limits and weather window for the operation, lightning risk.
- Allocation of personnel to a particular task, i.e. Crane Supervisor, Lifting appliance operator, Signaller, Riggers.
- PPE requirements.
- Information from previous shifts handover.
- Time out, has anything changed since the lift plan was developed.
- Any other business, i.e. "Does everyone understand the task?"

7.4. Communications

The common language to be used during the lifting operation will be established during the pre-task briefing. Where non-verbal communication is to be used, relevant hand signals should be clarified.

Where handheld radio communication will be used, the equipment must be checked prior to start of the lifting operation to ensure all equipment is functioning correctly (i.e. batteries, range, channel, frequency etc.) When directing the load, instructions shall be clear and precise. Unnecessary interference or radio activity that could distract members of the lifting team must be avoided. Back up communications must be considered; spare radios and batteries should be available, and back up procedures identified for use in case of radio failure.

If visual signals are used, then hand signals as stated within the Lift Plan shall be

observed. It is important that hand signals should be clarified and understood within the pre-task briefing. Video equipment such as CCTV is only to be used as an auxiliary device, and shall not be used as replacement for adequate communication and is not regarded as visual contact between the signaller and the Lifting Appliance Operator.

Where directing blind lifts, there shall be a designated signaller to ensure that the lifted load will not strike infrastructure assets or any person(s). The signaller must be in a safe position with clear visibility of the load path and must be in view, or able to communicate effectively, with the Lifting Appliance Operator. The communication must be appropriate for the operation, either radio or hand signaling. If the signaller is unable to maintain a clear view of the path of the load, then the Crane Supervisor must appoint assistant(s) for the signaling. All personnel involved shall have the same means of communication that is agreed prior to commencing the lifting operation. While the lift is travelling into blind zones then constant confirmatory communication is required as an If contact is lost, then the lifting operation must cease immediately. There shall be an agreed handover call sign between the lifting appliance operator and signallers when control of lifting operation is relayed from one signaller to another.

When performing lifting operations in noisy environments that restrict effective communication, a headset with integrated radio communication or visual signaling must be used. In case of disruption, poor visibility, unclear or failing communication, the lifting operation shall STOP immediately until the communication has been restored and the proper signal is given and understood. The Lifting Appliance Operator shall obey a STOP signal at all times regardless of whoever gives the signal. Hands free two way radio should be available for the crane operator during lifting operations. This applies for all class 2 lifting operations and most class 1 lifting operations. Exceptions should be based on risk assessment for the operational task. Examples are davit cranes where there is a clear line of sight and hand signals are more appropriate. Lifting of small items around vessel deck where the axillary crane operator is in clear view of the operation. During lifting operations all commands given to the crane operator must be repeated by the crane operator – if, for any reason, the crane operator does not repeat the command the slinger/signaler



must call an "ALL STOP" on the radio. Before lifting operations can resume lines of communication must re-established. Hands free two way radio should always be the primary means of communication for the main crane operator of a jack-up vessel.

The Crane supervisor is obliged to monitor commands given by the Signaller (Signalperson) during lifting operations at all times (verbal and/or visual).

7.5. Good practice During Lifting

The slinger attaching or detaching the load must give their authorization before the lifting equipment is to be operated. Wherever possible, hooks and other similar devices used for lifting to either have safety catches fitted or be shaped to prevent the accidental displacement of the sling.

The load should be lifted along the plumb line to avoid any load swinging motions and shock (side) loading of lifting equipment. Any lifting out of center of gravity must be minimized or avoided where possible.

Lifting equipment must not be used in the open air where weather conditions could affect the integrity of the equipment or expose persons to danger.

All steps described in the Lifting Plan must be taken to minimize risks identified during planning.

Where two or more items of lifting equipment are used, they, or their loads, must be prevented from coming into contact with each other. This will require continuous coordination between the different lifting teams.

The emergency STOP hand signal can be used by any person involved in the lifting operation at any time if they consider the operation unsafe. All persons shall communicate any safety concerns to the person in charge (i.e. Lift Supervisor) onsite, who shall then act accordingly based on his/her understanding of the process. Should responsible person consider there to be any threat to the health or safety of personnel or to the environment or to the integrity of plant or load then a defined local STOP WORK procedure shall be followed.

7.6. Environmental (Weather) Conditions

The executions of lifting operations must take into account the environmental weather conditions. The execution of lifting operations in adverse weather conditions must be avoided as these can impose loads on the crane and load and adversely affect the safety of lifting operations. Careful consideration should be taken to the coefficient factors of the load and suitable limits put in place.

In any lifting operation, the Lifting Appliance Operator and / or the Crane Supervisor shall have the final decision about whether to perform the operation due to environmental conditions, regardless of the maximum limits stated in the Lift Plan.

When lifting equipment is positioned where it could be adversely affected by wind speed, it shall never be operated in wind speeds that are in excess of those specified in the manufacturers operating instruction for the lifting equipment. Where wind

factors have the potential for adverse effects on the lifting operation, the wind speed shall be monitored with an anemometer or LiDAR at a suitable high point throughout the lifting operation and weather forecast (e.g. wind speed, direction, lightening risk etc.) should be available.

Necessary care shall be taken to consider the direction of wind and whether the wind is gusting, as this could place additional loads on the lifting equipment and could potentially cause the lifted load to travel into the lifting appliance or other structures.

In poor visibility including fog and night work, suitable means of communication must be established and applied. Whenever lifting operations are carried out at night, the Crane Supervisor shall ensure that adequate lighting levels can be maintained for the planned lift (i.e. high powered flood lighting). However, in extreme conditions where visibility is reduced significantly and has the potential to cause an incident, the lifting operation shall be stopped until there is sufficient improvement in visibility to enable operations to be resumed safely. As a minimum, the crane supervisor must ensure that clear visibility of the load being lifted during the lifting operation is maintained at all times.

Lifting operations shall not be performed should there be a significant risk of personnel injury or equipment damage resulting from ice or large amount of snow falling from high or rotating structures; or a significant amount of rain that could affect the stability of the load or ground conditions.

Crane supervisor must assess the associated control measures as stated within the Lift Plan, against the risks in real time because of weather conditions. Under no circumstances shall any external lifting operations be performed in the vicinity of electrical storms (lightning). Necessary care shall be taken to evaluate the risk of lightning. This can be achieved by using a weather service provider evaluating the risk for the given operation. Based on the risk the operation can be performed or delayed.

The Crane Supervisor has the authority to call off a lift if he deems the conditions to be unsafe. However, any person involved in the lift can at any point express their concerns to the Crane Supervisor if conditions are thought to be unsafe. No Lifting



Operations are to be carried out in wind speeds exceeding those stated in the Lift Plan. Where there is risk of loss of control of the load due to sudden gusts of wind, the operator must not operate the lifting equipment unless he is confident that he can handle the load safely. This may apply more to large, light loads.

A reliable anemometer should be available to those involved in the lifting operation and wind conditions closely monitored. The preferred height for measuring wind speeds for the component is at the lifting height. The identification of the weather window must be based on 10-minute mean in the forecast. The monitoring of the wind speed on site must be based on 3 second gust value. Lifts that can be concluded within half the available weather window and not longer than 6 hours need not include an alpha factor.

The effects on height and mean wind in a period will be affected by wind velocity that varies with time and height above the sea surface or height above ground. For these reasons, the averaging time for wind speeds and the reference height must always be specified.

7.7. Personal Protective Equipment (PPE)

As a minimum personnel shall wear PPE according to local site instructions.

It is suggested that personnel, climbing helmet (chin strap fastened), laced safety boots, task specific work gloves and hi-vis clothing. Personnel not involved in the lifting operation can wear non-climbing helmets.

For all lifting operations, the Crane Supervisor and signaller must be clearly identifiable from other personnel. This can be achieved be way of using an alternative color hi-visibility clothing and/or headwear.

Personnel who are required to work at height during lifting operations shall wear personal fall protective equipment. Designated attachment/anchorage points/ restrain methods must always be used, unless other sufficient fall protection control measures are implemented. This includes man riding operations. When working at height next to or above water in a MEWP or Man basket whether personnel should clip on or not must be based on an individual risk assessment i.e. risk of drowning vs. risk of fall injury. Regardless; life jackets must be worn at all times. Survival suit required depending on water temperature and day/nighttime. The risk assessment may also see the necessity for a personal locator beam (PLB) and/or other PPE or control measures. In addition see 8.3 Lifting equipment used for Lifting Persons below.

7.8 Management of Change

Whenever lifting operations are performed, a management of change procedure should be in place to ensure that changes to the established safe system of work are made safely and efficiently. Management of change will usually cover:

- deviations from standard company procedure, lift plan, work instruction, lift instruction
- unforeseen work
- unforeseen changes in site conditions

- unplanned modifications to lifting equipment or vessel
- vessel location
- crane setup position
- jib configuration
- major changes to the sequence of operation
- environmental (weather) conditions
- implementation of new systems
- changes requested by the Client, MWS or vessel
- other circumstances.

The above change of method would require a revised hazard identification and risk assessment. A sign-off from the Competent Person on the changes is needed prior to carrying out the task.



© MHI Vestas Offshore Wind

8. Safe use of Lifting Appliances and Load Control Systems

Use, maintenance, storage, check, examination and test of lifting appliances shall be according to the manufacturer's instructions and established safe system of work. Following general guidance for safe use should be applied as appropriate. An effective system for storage and use of spare parts shall be established.

8.1. Installation Vessel cranes

Installation vessel cranes shall only be used under the vessel Permit-to-Work system. Installation vessel crane shall only be used by personnel specially trained and

certified. The installation vessel crane shall be used according to the various modes specified by the crane manufacturers, e.g. fixed-to-fixed, fixed-to-floating, floating-to-floating. Each mode has its specific and limitations.

The hoists of the installation vessel cranes should only be used for lifting on/ off loads from a floating vessel if the lifting and lowering speed exceeds the heaving movements of the floating vessel.



© DEME

8.2. Support Vessel cranes

Cranes installed on the SOVs and CTV shall only be used by personnel specifically trained and certified for the operation. When lifting from the deck, of the SOV or CTV all sea fastening and restraint must be released such that the lift is accomplished safely with the minimum amount of slew and shock loading.

Loads lifted from and to an WTG foundation shall be lifted by lifting accessories designed for offshore dynamic conditions.

8.3. Lifting equipment used for Lifting Persons

Lifting appliances used for raising or lowering people should be specifically designed for the purpose. Such equipment may include lift trucks, MEWPS, scissor lifts, telescopic handlers and cranes. The equipment shall be tested, certified and supplied with relevant documentation. Operational wind limits should be in place and adhered to.

Persons being carried (e.g. in a man riding basket / man basket) should be protected from being injured by a hazard outside of it, i.e. fully enclosed when in use. Persons working from a carrier need to be protected by suitable edge protection; floor to be slip resistant; man riding basket to have devices to prevent free-fall, independent

of the means of suspension of the man riding basket; where practicable, other carriers to have devices etc. to prevent the carrier falling in the event of the failure of the primary means of support. In the event of malfunction, persons being lifted must not be exposed to danger and a reliable means of rescue must be available (incorporating means to summon assistance, emergency means of lowering the carrier or self-rescue equipment).

This means of access should only be used when safer means are not possible.

8.4. Winches for Load Control

When operating the winch (e.g. capstan) the operator should be positioned behind and to the side of the winch to ensure control of the spooling and horizontal control of the load at the same time.

The operator of the tagline system winches shall control proper spooling such that the wire rope will not be spooled in "piles" in the drum and that kinks are not created during spooling. In addition the operator shall ensure no other personnel is near or around snapback zones / lines of fire.

The operator shall never use his hands to guide the wire rope onto the drum.

The emergency stop shall at all times be in a working condition on both the remote-control unit and on the winch control unit.

8.5. Mobile Cranes

Mobile lifting appliances shall be positioned or installed in such a way as to minimize risk of a person being struck or the load moving in an uncontrolled manner. Path of travel (where fixed) to be protected by suitable enclosure.

Mobile cranes shall only be used on terrains, ground conditions and in configuration ensuring their tipping stability. Conditions affecting the mobile crane capacity, such as off-level, eccentric reeving, outrigger and track configurations, counterweights, ground conditions, swingout, side loading, impact loading, gantries and high masts, etc. shall be duly assessed and any negative effect factored into the mobile crane boom strength and ability to resist tipping.

Maintenance, storing, check, inspection, examination of temporary cranes shall be according to the manufacturer's instruction and general standards for safe use of lifting appliances referred to in this instruction.

recommendations. These types of cranes work in a hostile environment sometimes it could be several months between operation. Therefore, it is paramount that a thorough pre-use check is performed prior to use.

thorough pre-use check is performed prior to use.

Mobile cranes shall only be used by personnel particularly trained and certified for the operation of other lifting appliances as stipulated in section Operators of other lifting appliances.



© MHI Vestas Offshore Wind

8.6. Davit and Nacelle Cranes

8.6.1. Training and competence

Personnel should be trained in accordance with manufacturer's recommendation and hold the relevant certification for the area they are working to ensure compliance with local legislation.

8.6.2. Maintenance, inspection and thorough examination

Regular maintenance shall be performed of the lifting appliance in accordance with manufacturers recommendations. Thorough examination is a separate activity from maintenance and should be carried out by competent and authorized personnel and must comply with local legislation as a minimum.

Pre-use checks should also be performed in accordance with manufacturers

recommendations. These types of cranes work in a hostile environment sometimes it could be several months between operation. Therefore, it is paramount that a thorough pre-use check is performed prior to use.

Checks should include but are not limited to the flowing;

- Certification – Check all certification is within inspection criteria date
- Control functionality – Correct and uninhibited function of controls, (electrical/hydraulic/manual) with Clear signage on or adjacent controls
- Visual – Bolts, covers, welds, casting, hoses and hoist wire (Integrity and laying on the drum, corrosion).
- Hook - Safety catch and rope fitting
- Limit switches – Ensure all luffing, slewing and hoist limits are fully functional
- Test lift – Brake check of the hoist system
- Accessories (slings, shackles, pad eyes) in good order with current certification

All defects should be recorded and reported to management. If any defects are found that prevent the safe operation of the crane, then it must not be used and marked out of service until the defect has been rectified by competent and authorized person and deemed safe for use.

8.6.3 Planning

All lifting operations should be thoroughly risk assessed and planned. Careful planning will ensure that operational hazards are avoided out in the field. This should be done by a competent person who has knowledge of the task and type of lifting appliance to be operated. Although many lifting operations for these cranes are generic on occasion there will be lifting operations that are not generic in nature and should be assessed by the competent person planning the lifting operation.

Consideration should be given to the following in the lifting plan;

- Supply vessel -Consider vessels used, lifting and landing area for the loads.
- Weather - Wind speed and sea state, other environmental aspects such as snow, ice, lightning, fog etc.
- Pre-use checks – Lifting appliance
- Pre and post use checks – Lifting accessories
- Personnel – Supervision, competency, numbers and training
- Vision - Visual sight of the load (can it be seen throughout the lift, is another signaller required?)
- Accessories – Correct lifting accessories specified and made available
- DAF – Dynamic Amplification Factor, shall be applied to account for global dynamic effects resulting from vessel motions, boom, wire and rigging stiffness, boom tip location and motions, crane movements and wind loading
- Lifting Bags – One bag one hook rule. Do not overfill bags
- Rigging length – Clearance to hand rail vessel and foundation platform, (note limited head room available will limit the lifting height and may be bespoke for the operation)
- Over crowding of hooks - No more than two accessories on the hook (Ensure that if two used they fit correctly, and the safety catch can open and close freely
- Dropped Objects – Ensure no loose items can come free of the load
- Over Water – Keep load over water when possible
- Personnel positioning – Position of personnel when lifting operation is performed
- Suitable and sufficient tag lines
- Use of Boat hooks for retrieving loads
- Signals – Should be clear unambiguous and understood by all. Radios should be used where possible
- Rigging – Specify rigging method
- Variations – Has anything changed is it still safe to continue
- Periodic reviews – Ensure that no critical factors have been changed

Many pieces of equipment that are lifted from the supply vessel are then transferred to the nacelle by using the nacelle crane. This should be in a two-step phase with the loads transferred to the foundation platform then in turn up to the nacelle. Always check the integrity of the load before transferring to the nacelle crane hook for lifting.

9. Review of Lifting Operations

The Competent Person should ensure that a proper reporting system and culture is in place and all safety observations, lessons learned and incidents are timely collected, recorded and reported. The Competent Person shall then review the findings, consider necessary changes in the safe system of work and update the Lift Plan as per management of change procedure.



© Ørsted

Appendix

10. Appendix 1 - Abbreviations and Definitions

10.1. Abbreviations

CCTV _____ Closed circuit television
COA _____ Certificate of Approval
CoG _____ Centre of Gravity
CTV _____ Crew Transfer Vessel
GWO _____ Global Wind Organization
ISO _____ International Standards Organization
MEWP _____ Mobile Elevated Working Platform
MWS _____ Marine Warranty Surveyor
PLB _____ Personal Locator Beacon
PPE _____ Personal Protective Equipment
RA _____ Risk Assessment
RFID _____ Radio-Frequency Identification
SOV _____ Service Operation Vessel
SSOW _____ Safe System of Work
TP _____ Transition Piece
WAH _____ Working at Height
WLL _____ Working Load Limit
WTG _____ Wind Turbine Generator

10.2. Definitions

Ballasting	Manual or automatic operation performed during dy namic lifting operations on the installation vessel to keep the vessel stable and level.
Banksman	See *Signaler.*
Capacity Charts	A set of charts or tables provided by the manufacturer of the lifting appliance / crane detailing lifting capacities in all possible configurations.
Capstan winch	Vertical winch used in conjunction with tag lines to control loads.
CE markings	The CE marking is a mandatory European marking for certain product groups to indicate conformity with the essential health and safety requirements set out in European Directives. To permit the use of a CE mark on a product, proof that the item meets the relevant requirements must be documented.
Certificate of Approval	The Certificate of Approval is issued by the Marine Warranty Surveyor and contains conditions which must normally be complied with to ensure the operation is insured. All lifting operations involving main components require a COA.
Class One Lift	This classification includes lifting operations where load characteristics are recognizable and there are no significant hazards within the working area or on the access route for the crane to the working area.
Class Two Lift	Lifting operation involving main components, or where significant hazards have been identified with the load or with the working area or access route of the crane, and the crane is used to lift complex loads or persons, or where two or more cranes are used to lift the load, or where the lifting operation is carried out at a location with exceptional hazards.
Coefficient factors	Various factors used to calculate wind loading.
Competent Person	Person who plans and manages lifting operations and has training, practical, theoretical knowledge and experience required to plan a lifting operation safely and establish a safe system to work. Elaborated in appendix 1.
Contractor	Individual, organization, or business, that signed a contract to perform a lifting operation.

Crane Operator	See *Lifting Appliance Operator.*
Crane Supervisor	Person who controls the lifting operation, and ensures it is carried out in accordance with the Lift Plan. Elaborated in appendix 1. Alternative titles; Lifting Supervisor, Heavy Lift Supervisor. This guideline recommends the title "Crane Supervisor".
Danger Zone	A hazardous area, for example under a suspended load.
Davit Crane	A lifting device consisting of an angled beam which pivots over a vertical axis for example, on a pedestal on the WTG foundations.
Declaration / Certificate of Conformity	A certificate supplied by the manufacturer with products that demonstrates compliance with essential health and safety design requirements
Dynamic Amplification Factor	A factor accounting for the dynamic effects normally experienced during lifting.
Employing organization	Organization that requires a lifting operation to be carried out.
Foundation	Base on where the WTG is placed, this is usually a Monopile, or Jacket type.
Gross weight	The calculated or weighed weight of the item to be lifted including a weight contingency factor.
Hazard	A potential source of harm or adverse health effect on a person or persons.
Hook load	Weight of the load plus weight of rigging.
Installation vessel	The installation vessel can be self-propelled or otherwise and can be either a jack-up vessel (self-elevating) or floating. The vessel main crane is used to lift the main components onto the foundation and the installation vessel will usually also include sea fastening for transporting the components. Auxiliary cranes and other lifting equipment where present may also be used for smaller loads.
Knuckle boom crane	Also called an articulating crane as it features hydraulically or electrically powered articulated arm.
Lift Plan	Written procedure establishing a safe system of work for a lifting operation

Lift point	The connection between the rigging and the load to be lifted.
Lifting Accessory	Any component that is not part of the Lifting Appliance, but forms part of the lift, i.e. placed between the Lifting Appliance and the load, also referred to as rigging.
Lifting Appliance	The primary plant used for lifting purposes, for example crane, winch, davit or forklift.
Lifting Appliance Operator	The person responsible for ensuring the Lifting Appliance (e.g. crane) is operated safely and in accordance with the manufacturer's instructions and recommendations. Elaborated in appendix 1. Alternative titles: Crane Operator.
Lifting Equipment	Work equipment for lifting or lowering loads and includes attachments used for supporting, anchoring or fixing it. Lifting Equipment includes both Lifting Accessories and Lifting Appliances.
Lifting operation	Any operation concerned with the lifting or lowering of a load using a lifting appliance. For a detailed scope of this document, see 0 .
Lifting organization	The lifting team described in this document.
Lifting Supervisor	See *Crane Supervisor.*
Lifting Zone	The area around a lifting operation where if the load fell, shifted, rotated or otherwise moved in an unexpected manner could result in an injury or damage to individuals, equipment or materials in the area.
Load	Any item being lifted or lowered including a person.
Main Components	Foundation, transition piece, tower, nacelle, hub and blades.
Man Basket	A cage certified for the safe lifting of personnel. Alternative names: Personnel basket or Man cage.
Management of Change	Formal strategy to control deviations and mitigations from the approved Lift Plan.
Marine Warranty Surveyor	An independent third-party organization that provides technical review and issues the COA for selected marine construction and transportation project operations on behalf of the employing organization and/or insurance provider.

Mobile Elevated Working Platform	A mechanical device used to provide temporary access for people or equipment to inaccessible areas, usually at height.
Mobile work equipment	Any work equipment which carries out work while it is traveling or which travels between different locations to carry out work e.g. pallet trucks and forklifts.
Pad eye	A certified lift point consisting essentially of a plate, reinforced by cheek plates if necessary, with a hole through which a shackle may be connected.
Periodic/ Thorough Examination	All lifting equipment must be subject to regular periodic thorough examinations during the service life of the equipment. The frequency of the periodic examinations shall be determined by local legislation & manufacturer's recommendations. All lifting equipment must be periodically inspected by a competent person at least annually.
Permit to Work System	A formal written system used to control certain types of work that are potentially hazardous. A Permit to Work is a document which specifies the work to be done and the precautions to be taken.
Pre- and Post-Use Inspection	Visual and functional assessment of the lifting equipment's condition before and after use.
Pre-lift check sheet	Reference document used for controlling the lifting operations completed by the Responsible Person in Class 2 lifting operations.
Pre-task briefing	Briefing meetings between all associated personnel prior to commencing the lifting operation to ensure everyone is aware of their operational responsibilities. This must be documented and recorded. Alternative titles: toolbox meeting, toolbox talk.
Responsible person	A responsible person is appointed to control basic lifting operations as defined in Class 1.
Rigger	See slinger.
Rigging	Same as lifting accessory.
Rigging weight	The total weight of rigging, slings, shackles etc. and other devices or items used to connect the load.

Risk	The combination of the likelihood and severity of an incident occurring.
Risk Assessment	A systematic process of evaluating the potential risks that may be involved in a projected activity or undertaking. For lifting operations this is normally carried out by the competent person during the planning phase. In some countries this is a legal requirement.
Safe System of Work	A defined procedure resulting from risk assessment & designed to eliminate or reduce risks to an accepted level.
Safe Working Load	The maximum load that can be safely applied to a Lifting Appliance or Accessory in accordance with the manufacturer's instructions. This documents recommends using only Working Load Limit (WLL) where ever possible and will not refer to Safe Working Load (SWL) further.
Safe Zone	An area that has been risk assessed and a safe system of work established to minimize the risk to personnel.
Sea fastening	The system used to attach components to a barge or vessel for transportation by sea.
Signal Person	See *Signaller*.
Signaller	Person responsible for giving direction and ensuring safe movement of the lifting appliance. Elaborated in appendix 1. Signaller Alternative titles: Signal Person, Banksman.
Slinger	Person responsible for attaching and detaching the load and identifying and use of lifting accessories in accordance with the specifications of the Lift plan. Elaborated in appendix 1. Alternative titles: rigger.
Suspended Load	A load hanging from a lifting accessory. See ??? for further details.
Tag Line	A rope of various materials used to control the load during lifting operations.
Tool Box Talk / meeting	See *pre-task briefing*.
Transition Piece	Also known as TP is fixed on to the foundation and is the interface between the foundation and the WTG, usually has a platform on which the Davit is positioned.

Traverse/Tagline System	A remotely operated load control system and type of work equipment, used for orienting the load horizontally during lifting. Referred to as traverse system in this document.
Trunnion	A lift point consisting of a horizontal tubular cantilever, round which a sling or grommet may be passed. An upending trunnion is used to rotate a structure from horizontal to vertical, or vice versa, and the trunnion forms a bearing around which the sling, grommet or another structure will rotate;
Weather Window	Time frame as per weather forecasts when a lifting operation can be performed within the pre-defined maximum environmental limits.
Working Load Limit	The maximum load that can be safely applied to a Lifting Appliance or Accessory in accordance with the manufacturer's instructions. Has superseded the term Safe Working Load.



© MHI Vestas Offshore Wind

11. Appendix 2 - Changes

Revision	Major Changes
2018 March	• First publication
2020 June	• Purpose and scope sections combined and expanded for clarification • Abbreviations and definitions moved to appendix 1 • 4.6.1 Suspended Loads section added • 7.8 Management of Change section added • 8.5 Mobile Cranse section improved • 8.6 Davit and Nacelle Cranes section added

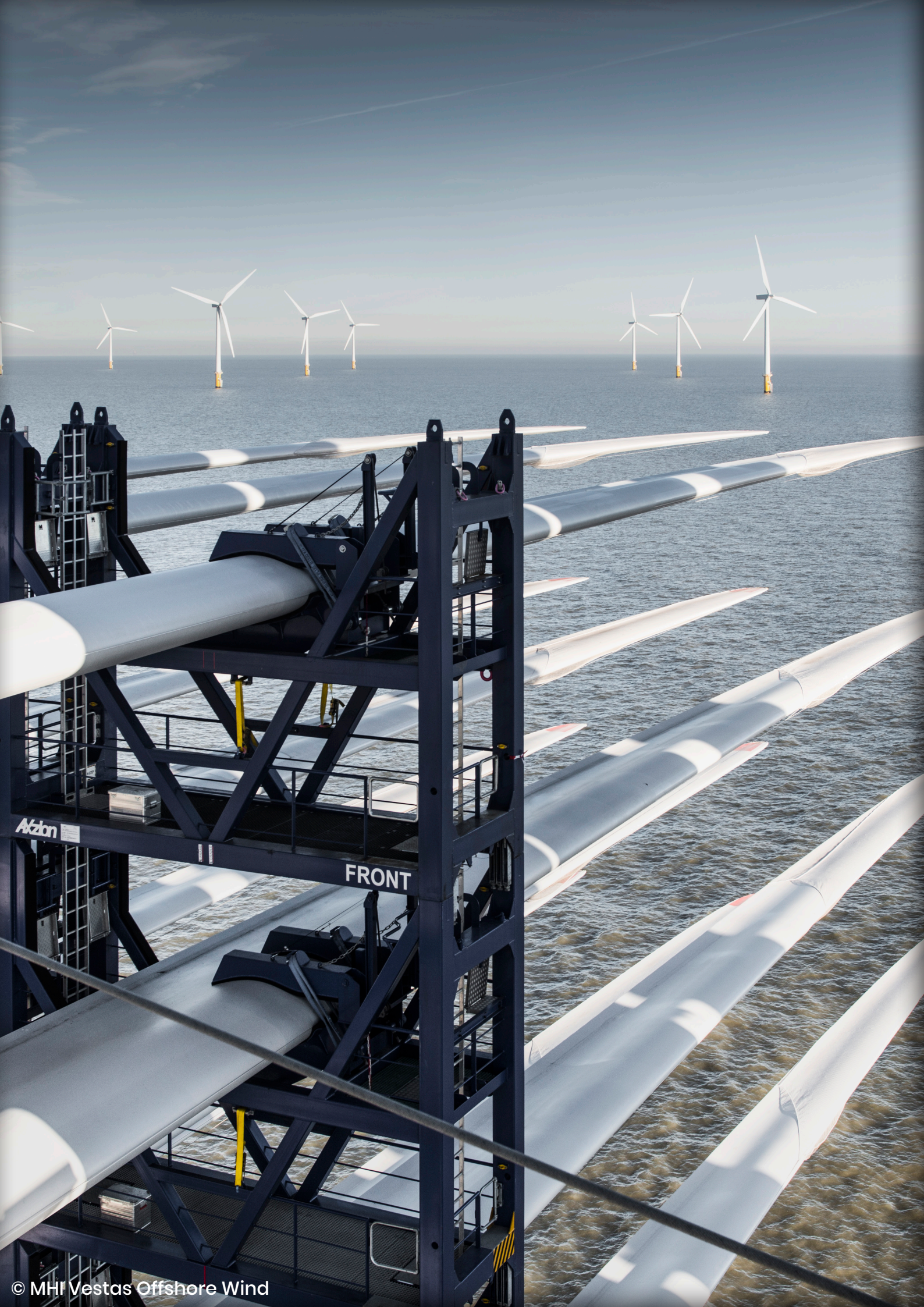

© MHI Vestas Offshore Wind

12. Appendix 3 – Roles & Responsibilities and Competence Requirements

Class 2 Competent Person

RESPONSIBILITY

- Develop a Lift Plan in accordance with Industrial standard and local legislation.
- Establish the correct crane to be used, based upon weight of load, weight of lifting accessories, height of load and radius of lift
- Consider the location of the lifting operation, including ground conditions
- Ensure that the crane is thorough examined (including lifting accessories)
- Ensuring that a system for reporting defects is in place.
- Select appropriate lifting accessories, including their method of attachment to the load, and any protection used to prevent damage
- Conduct a risk assessment for the operation and communicate mitigations to all persons involved in the operation.
- Brief all persons involved in the lifting operation to ensure that the safe system of work described in the Lift Plan is understood.
- Handover of the Lift Plan to the Lift Supervisor
- Ensure that there is a Lift Supervisor designated to direct personnel and to ensure that the operation is carried out in accordance with the Lift Plan.
- Liaise with any other persons or authority, as required to overcome any hazard, by including any necessary corrective action or special measures in the safe system of work.
- Ensure that lifting points provided on the load are adequate for the loads applied.
- For Tandem Lifting, ensure that the cranes are compatible in lifting characteristics, with sufficient margins within the rated capacity of each crane to allow for any additional dynamic loading that could be transferred from one crane to another during movement of the load.
- Ensure that the lifting operation is planned so that there is no possibility of contact between the jibs of the cranes or jibs and/or the load.

COMPETENCE REQUIREMENTS

- Awareness of the requirements of the Industrial standard.
- Competent person qualified and/or certified with practical/theoretical knowledge to the Industrial standard and local requirements.
- Knowledge of the requirements under local legislation, regulations and codes of practice that relate to all types of lifting duties.
- Knowledge of maintenance, inspection, thorough examination and testing requirements of lifting equipment and accessories.
- Understanding of relevant information relating to different types of lifting accessories i.e. markings, certificates, and thorough examination reports, etc.
- 5 years minimum comprehensive experience in Lifting Operations and 2 years of planning lifting operations.

Crane Supervisor

RESPONSIBILITY

- The Lift Supervisor should direct and supervise the lifting operation, ensuring that these are carried out in accordance with the Lift Plan
- Supervisor the interface during all sequential and/or simultaneous lifting operations within the lifting zone to ensure safe execution.
- Ensure all persons involved with the lifting operations are qualified to perform their task i.e. certificated evidence.
- Brief all persons involved in the lifting operation to ensure that the safe system of work described in the Lift Plan is understood
- Perform pre-task briefing prior to lifting operation.
- Ensure pre-lift checklist is completed and signed before the lift is initiated
- Give clear, unambiguous instructions to all other members of the lifting team
- Conduct shift handovers
- The Lift Supervisor has sufficient authority and MUST stop the lifting operation if the supervisor considers it dangerous to proceed.
- Liaise with the Competent Person for all matters relating to the Lift Plan – i.e. to request a variation and obtain authorization.
- Sign onto the Lift Plan.

COMPETENCE REQUIREMENTS

- Awareness of the Industrial standard.
- Qualified and certified with practical/theoretical knowledge to the industrial standard and local legislation
- Fully conversant with the duties of all persons involved in the lifting operation;
- Understanding of relevant information relating to different types of lifting accessories i.e. markings, certificates, and thorough examination reports, etc.
- Able to assess danger to the lifting operation from changed circumstances on site.
- Full knowledge and understanding of the SSOW (Lift Plan and/or work instructions).
- To be assessed and approved by the Competent Person.

- Class 1 requires 1 year comprehensive experience and a minimum of lift Supervisor training.
- Class 2 requires 4 years minimum comprehensive experience in Lifting Operations.

Class 1 Competent Person

RESPONSIBILITY

- The Competent Person to be in charge of the execution of lifts in class 1
- The Lift Responsible should direct and supervise the lifting operation, ensuring that these are carried out in accordance with the Lift Plan
- Brief all persons involved in the lifting operation to ensure that the safe system of work de-scribed in the Lift Plan is understood
- Perform pre-task briefing prior to lifting operation.
- Ensure visual pre-lift check is completed before the lift is initiated
- Give clear, unambiguous instructions to all other members of the lifting team
- Ensure that the works are completed in timely, safe and controlled manner
- Responsible to the competent person
- To be assessed and approved by the project. Must report to the competent person with any issues related to lifting operation or variations in lifts

COMPETENCE REQUIREMENTS

- Is an appointed technician.
- Executing class 1 lifts requires 1 year relevant experience in lifting operations or supervision by a Competent Technician.
- Qualified and certified with practical/theoretical knowledge to Offshore Lifting Operations.
- Fully conversant with the duties of all persons involved in the lifting operation
- Understanding of relevant information relating to different types of lifting accessories i.e. markings, certificates, WLL etc.
- Able to assess risks to the lifting operation from changed circumstances on site.
- Full knowledge and understanding of the SSOW (Lift Plan and/or work instructions).

Lift Appliance Operator

RESPONSIBILITY

- Participate in the planning of lifting operations where applicable
- Comply with the manufacturer's instructions for the safe set up, operation and maintenance of the Lifting Appliance/Crane
- Follow instructions and signals given by the nominated Signaller at all times
- Immediately stop the operation when instructed to do so – i.e. When an emergency stop signal is given.
- The Lifting Appliance/Crane shall be attended whilst under load.
- Complete all required “routine” periodic checks and pre & post-use inspections
- Participate in the pre-lift talk of lifting operations.
- Sign onto the pre task briefing

COMPETENCE REQUIREMENTS

- Qualified and certified in the specific type of lifting appliance and/or in accordance with the requirements of local legislation.
- Able to assimilate and apply information contained in reports and duty charts relating to the range of duties and safe use of the Lifting Appliance
- Qualified Slinger.
- Full knowledge and understanding of the SSOW (Lift Plan and/or work instructions).
- Relevant training certificates
- Class 1 requires 1 year relevant experience in lifting operations or supervision by a Competent Technician.
- Class 2 requires 1 year comprehensive experience in lifting operations.

Slinger

RESPONSIBILITY

- Participate in the pre-lift talk of lifting operations.
- Responsible for attaching and detaching the load to and from the Lifting Appliance/Crane attachment.
- Ensure the correct use lifting accessories and other equipment in accordance with relevant manuals, work instructions, SSOW (Lift Plan) and Risk Assessment
- Perform pre & post use checks on lifting accessories
- Ensure equipment found damaged or faulty is reported to the Lift Supervisor, removed from service, tagged and quarantined accordingly
- Sign onto the Pre-lift checklist (where applicable)
- Sign onto the SSOW (Lift Plan) pre task briefing

COMPETENCE REQUIREMENTS

- Qualified with practical/theoretical knowledge about SSOW (Lift Plan) and/or work instruction.
- Slingers operating specialized equipment, must be trained in accordance with the manufacturers requirements and/or scope of work requirements.
- Able to establish weights and the effect of the centre of gravity, and to balance loads and judge distances and clearances.
- Able to select the appropriate lifting accessories and check that they are in a suitable condition
- Relevant training certificates.
- Class 1 requires 1 year relevant experience in lifting operations or supervision by a Competent Technician.
- Class 2 requires 1 year comprehensive experience in lifting operations.

Signaller

RESPONSIBILITY

- Participate in the pre-lift talk of lifting operations.
- Provide distinct, clear and agreed signals (verbal instructions when using audio equipment) to the Lifting Appliance operator in order to direct the lifting movement.
- Request additional personnel to assist, if required when directing blind lifts.
- Direct safe movement of the Lifting Appliance Operator and load
- Sign onto the pre task briefing.

COMPETENCE REQUIREMENTS

- Qualified with practical/theoretical knowledge to the industrial standard and local requirements.
- Agreed Verbal commands (terminology)
- Agreed Hand Signals (recognized signals).
- Knowledge of the SSOW (Lift Plan) and/or work instructions.
- Relevant training certificates.
- Class 1 lifts requires 1 year relevant experience in lifting operations or supervision by a Competent Technician.
- Class 2 lifts requires 1 year comprehensive experience in lifting operations.
- As Competent person in Class 1:
  - Fully conversant with the duties of all persons involved in the lifting operation;
  - Understanding of relevant information relating to different types of lifting accessories i.e. markings, certificates, and thorough examination reports, etc.
  - Able to assess danger to the lifting operation from changed circumstances on site.
  - 1-year minimum comprehensive experience in signalling lifting operations.

13. Appendix 4 - References

This document is an interpretation of existing standards for the wind industry and setting new guidance where there are none. Pay attention to that this document is superseded by local legislation and will not attempt to list all applicable local legislation. The following have been used for inspiration and may be consulted for further information, but it is by no means and exhaustive list.

Reference	Publisher, Title, Year
LOLER ACOP l113	Health and Safety Executive, Safe use of lifting equipment, 2014
ISO 15513:2000	ISO, Cranes - Competency requirements for crane drivers (operators), slingers, signallers and assessors, 2000
BS 7121-1:2016	British Standard, Code of practice for safe use of cranes. 2016
DNVGL-ST-N001	DNVGL, Marine operations and marine warranty, 2016
IMCA M187	IMCA, Guidelines for lifting operations, 2018
R-002	Norsok, Lifting equipment, 2012

14. Appendix 5 - CNTR-SMP-LP-01 Crane Lift Plan (Combined Sample)

Client: xxxx. Task: Offload Shipping Container	Document Number: CNTR-SMP-LP-01

Lift Plan for the lift and positioning of Shipping Container

CLIENT	XXXXX
SITE	XXXXX
PROJECT	XXXXX

Site Address	xxxx
Site Contact: Phone: email:	xxxx
Competent Person: Phone: Email:	xxxxx

Table of Contents

1. Introduction 2
2. Arrival on Site 2
3. Roles and Responsibilities. 3
   i. Appointed Person 3
   ii. Crane Supervisor 3
   iii. Signaller(s) 4
   iv. Crane Operator 4
4. Items to be Lifted 5
5. Crane Details 5
6. Lifting Accessories: 6
7. Safe Working Load: 6
8. Communication 6
9. Contingency. 6

10. Suspended Loads 7
11. Lifting Operation 8
12. Drawings 9
13. List of Appendix 10
14. Competent Person Contact details 10

1. Introduction

This method statement has been prepared and based on the information supplied by our client together with site inspection. Risk assessment and drawings completed by the Competent Person. All work shall be performed in accordance with:

1. The Management of Health and Safety at Work Regulations 1999 Reg. 3.
2. Health & Safety At Work Act 1974
3. BS 7121 Safe Use of Cranes and Lifting Operations Parts 1 and 3
4. Lifting Operations and Lifting Equipment Regulations 1998
5. The Provision and Use of Work Equipment Regulations 1998 Reg. 3 to 11

NOTE; The above legislation is applicable to the UK. Local/national legislation shall be adhered to in countries where the above is not applicable.

TBT	Tool Box Talk
m/s	Meters Per Second (Wind Speed)
RCI	Rated Capacity Indicator
CoG	Centre of Gravity
WLL	Working Load Limit
ABS	Alloy Bow Shackle
EWL	Effective Working Length

2. Arrival on Site

Before any work, including the rigging of cranes commences any induction necessary will be carried out by site personnel. During this all known hazards will be identified, and the evacuation routes and procedures advised.

The Crane Supervisor will hold a Tool Box Talk (TBT) with the crane operator, slinger signallers and all other personnel involved with the lifting operation.

SAMPLE

During the TBT the Crane Supervisor will communicate the work to be executed in the method statement and identified roles of the main personnel and their responsibilities. The content of risk assessments associated with this method statement must also be discussed.

Once inductions and TBT has taken place the crane shall be set up in position shown on drawing CNTR-SMP-DWG-01 in accordance to manufacturers instruction.

3. Roles and Responsibilities.

i. Appointed Person

Full authority and responsibility for the contracted.

Delegates authority but not responsibilities to the crane supervisor.

Appointed person will conduct a meeting with Crane Supervisors and lifting team members and any relevant personnel to go through the lift plan and ensure it is understood by all. NOTE. This may be done remotely.

Coordinate, consolidate and issue an overall safe system of work based on the elements provided.

Ensures that coefficient calculations have been made so that the crane is not operated in wind speeds in excess of those given in the instruction manual for the crane.

Selecting appropriate lifting accessories, including their method of attachment to the load, and any protection used to prevent damage.

Ensuring that lifting accessories are thoroughly examined, at least within the previous 6 months. (this duty may be delegated to Crane Supervisor)

Ensuring that the crane has been thoroughly examined at least within the previous 12 months (including testing where appropriate), within 6 months if used for man riding duties and inspected and checked before use. Ensuring that a system for reporting defects is in place.

Designating a person to check the lifting accessories and any lifting points that are provided on the load to ensure that they are free from any obvious defect before attaching the load to the crane. The appointed person should, when necessary, consult with others with specialized knowledge and experience.

Must approve any change to the procedure. (Management of change)

Will conduct a “lessons learnt” after lifting operations to see what can be done safer and more efficiently.

ii. Crane Supervisor

Has the appointed persons delegated authority during lifting operations.

SAMPLE

The crane supervisor should direct and supervise the lifting operation, ensuring that all tasks are carried out in accordance with the current lift plan.

To supervise the lifting operations, ensuring that these are carried out in accordance with the correct specific safe system of work for each activity.

Ensuring that the crane has been thoroughly examined at least within the previous 12 months (including testing where appropriate), within 6 months if used for man riding duties and inspected and checked before use. Ensuring that a system for reporting defects is in place.

Adherence to the approved procedure and ensures correct use of specific rigging and lifting devices.

Ensures that lifting accessories are visibly inspected prior to and after each lift.

Ensures that lifting accessories and equipment is certified and within its inspection regime date.

Carries out tool box talk to the lifting team.

Completes any necessary documentation associated with lifting operations.

Attends risk assessment, method statement, lift plan meetings and reviews changes to procedure.

Informs appointed person when necessary if any changes are required to the lift plan.

Communicates any changes in lifting procedures to the lifting team.

Has authority to stop or suspend lifting operations if they consider it dangerous to proceed.

iii. Signaller(s)

Responsible for initiating and directing the safe movement of the Crane Operator in the manoeuvring of the load safely to its destination.

Provides feedback to the Crane Supervisor to improve methodology, health and safety.

Cooperate with the Crane Supervisor and other members of the team.

Carries out lifting operations activities and follows procedures laid out in the lift plan.

Advises the Crane Supervisor that an operation or a task should not start or should be suspended, in case they feel that the work cannot be completed in a safe manner.

Has authority to stop or suspend lifting operations if they consider it dangerous to proceed.

Attends pre-task briefing.

iv. Crane Operator

Responsible for the correct operation of the crane in accordance with the manufacturer's instructions and within the safe system of work.

Execute main lifting operations according to approved procedures and as instructed by the Crane Supervisor.

SAMPLE

The Crane Operator will at any one time respond to the signals from one signaller who should be clearly identified.

Provides feedback to the Crane Supervisor to improve methodology, health and safety.

Cooperate with the Crane Supervisor and other members of the team.

In an emergency a commonly recognised stop signal may be given by any person observing a situation leading to danger and the Crane Operator should respond to that signal.

Execute Complex, Intermediate and Basic lifts as instructed by the Crane Supervisor.

Advises Crane Supervisor that an operation or a task should not start or should be suspended, in situation where they feel that the work cannot be completed in a safe manner.

Attends pre-task briefing.

4.PPE Requirements

Minimum PPE requirements stated below.

NOTE: This list is not exhaustive and extra PPE may be required depending on site specific requirements.

- Hard Hat
- Toe protection ankle boots
- Hi Vis clothing
- Protective gloves suitable for the task
- Light eye protection.

5.Items to be Lifted

Shipping Container 12.0m x 2.5m x 2.3m high.

Weight: 10.0 metric tons

6.Crane Details

Type:	Liebherr LTM 1095-5.1
Capacity:	95 metric tons
Counterweight:	23.0 metric tons
Main boom length:	29.2m

SAMPLE

Outrigger centres: 7.3m x 7.0m
Hook Block capacity: 16.0 metric tons

Maximum working windspeed: 11.0 m/s (10 minute mean)

7.Lifting Accessories:

- 4 x Container lifting lugs WLL 32.0t (4 pieces)
- 1 x Fibre sling (basket configuration) EWL 4.0m (EWL 2.0m) WLL (30.0t)
- 4 x Fibre slings EWL 10.9m WLL 10.0t
- 4 x Sling shackles WLL 12.0t
- 1 x Lifting beam 2.55m EWL WLL 40.0t
- 1 x Sling shackle WLL 30.0t

8.Safe Working Load:

Load: Shipping Container
Max Radius: 16.0m
Weight of Load: 10.00 metric ton
Weight of rigging: 00.50t
Weight of hook block: 00.30
Fly-jib deduction: 00.31t
Total load: 11.11t
WCF 10% (tons) 01.12t
Factored Load: 12.23t
Crane capacity: 14.70t
% of capacity used: 84%

8.Communication

The means of communication for this lifting operation shall be by recognised hand signals. These must be discussed and agreed before lifting operations start. The signaller should stand in secure position where they can see the load and can be seen by the crane operator clearly. The signaller should face the crane operator if possible. Each signal should be distinct and clear.

Recognised hand signals used must conform BS7121 or similar locally recognised body.

9.Contingency.

Should the view of load by crane operator be obstructed the communication method shall be by means of radios. Spare batteries shall be carried. All instructions must be clear and concise.

If communication is lost then lifting operations must cease immediately until the issue is resolved.

SAMPLE

10.Suspended Loads

Personnel should never position themselves under a suspended load.

Where it can be avoided, loads should not be suspended over occupied areas. Where it cannot be avoided, the risks to people must be minimised by safe systems of work and appropriate precautions. Where loads are suspended for significant periods, the area below them should be classed as a danger zone, where access is restricted.

11. Check List

Check list to be completed by crane supervisor prior to and during lifting operations

Pre Lift Check Points Tick boxes to confirm the following (where applicable) have been checked					
	y	n		y	n
Crane(s) test certificates			Site induction		
Crane thorough examination report			Method Statement & Drawings Issue		
Operator weekly inspection form			Risk Assessment issued		
Manufacturer instruction manual			Slingers Competency certification		
Test certificates / thorough exam reports for all lifting accessories			Operator(s) CPCS card and crane specific certificates		
Spill pack available			Expiry date		
Toolbox talk delivered and recorded			Communication Method identified		
Hand Signals/Radio			Appropriate PPE		

Erection Checklist Tick boxes to confirm (where applicable) completion					
	y	n		y	n
Working area cordoned off			Lift performed as Method Statement		
Cranes set in correct location			Item accepted by client		
Crane limits & load indicator OK			Rigging released as Method Statement		
Rigging fitted to item as detailed			Cranes de-rigged		
Weather within acceptable limits			Site cleared		

Crane Supervisor:	Signature:	Date:

11.Lifting Operation

The following section provides detailed methodology for lifting operations:

Number of personnel required; 1x Crane supervisor. 3 x Slinger signallers

Proximity to the load; Persons should always keep maximum working distance between the load and themselves. Do not approach the load unless necessary and only when it is almost landed onto laydown location.

Means of communication;. Communication *shall be by recognised hand signals such as in BS7121. Alternatively use hand held 2 x way radios*

Applicable Drawings; *CNTR-SMP-DWG-01 & 01A*

Wind Speed limits for operation; *11.0 m/s (10-minute mean)*

Crane type for this lifting operation;

Liebherr LTM 1095-5.1 (95t capacity mobile crane)

1. Crane Supervisor shall carryout TBT with all personnel involved with the lifting operations.
2. All sling and rigging must be in accordance with drawing numbers where applicable. All lifting accessories must have valid certification.
3. Ensure rigging is checked for damage pre- and post-use.
4. The Lifting Supervisor will provide all information regarding weights and CoG to all involved with the lifting operation.
5. Under guidance from the slinger signaller the lorry shall reverse into position as shown in applicable drawing. Lower the crane hook to grade to attach the lifting accessories.
6. Hoist the crane hook until the accessories are above the height of the shipping container. Using boom, hoist and slew crane motions, position the accessories centrally above CoG of the container.
7. Slowly lower the crane hook so that the lifting points on the load can be connected to their relevant lifting accessories by the Slingers.
8. 2 x 6.0m taglines will be attached to the load and transferred to the Slingers.

SAMPLE

9. Using hoist slew and luffing motions the Signaller will instruct the Crane Operator to slowly take up the slack in the slings, so a final check will be made.

10. Ensure that the slings are correctly tensioned and that the hook and accessories are positioned centrally over the CoG of the load.

11. Check for loose items that could fall from the load when lifted.

12. The Signaller will direct the Crane Operator to slowly raise the load 0.5m, so it is free from snags or obstructions, stop brake check!

13. Once satisfied the Crane Supervisor will instruct the lorry driver to slowly drive the transport vehicle out from under the suspended load.

14. The Crane Operator guided by the Signaller will slew the load clockwise and boom down to approx. 16.0m radius until the container is suspended centrally above its required laydown position. Slowly lower into position.

15. The Signaller will instruct the Crane Operator to lower the load until, with the assistance of the Slingers, it is guided into its position.

16. Once correct positioning is confirmed, the crane hook will then be lowered to a point where the slings can be safely detached from the load.

17. Once the rigging has been removed the Signaller will instruct the Crane Operator to hoist the slings/rigging clear of the container and slew anti-clockwise. (Be aware of slings snagging during this process)

18. Remove the accessories and store in their nominated storage location.

19. De-rig the crane, carryout housekeeping duties and depart the work area.

4. Drawings

Drawing id No.	Lift items table	
	Item Description	Item Weight
CNTR-SMP-DWG-01	Drawing showing safe zones, crane position and relevant information	10.00t
CNTR-SMP-DWG-01A	Container rigging drawing	10.00t

SAMPLE

5. List of Appendix

List of appendices relating to the lifting operations.

Appendix 1_ CNTR-SMP-RA-01 Lifting RA

Appendix 2_ CNTR-SMP-DWG-01 & 01A (associated drawings including safe zones)

Note; Where documents and drawings are referenced user must always check latest revisions are used in relation to this lift plan. If in doubt contact the responsible person.

6. Competent Person Contact details

In the event that there is a requirement to contact the competent person for lifting operations they may be contacted using the mail address and phone number below.

Mail- xxxxx

Tel- xxxxxx

SAMPLE

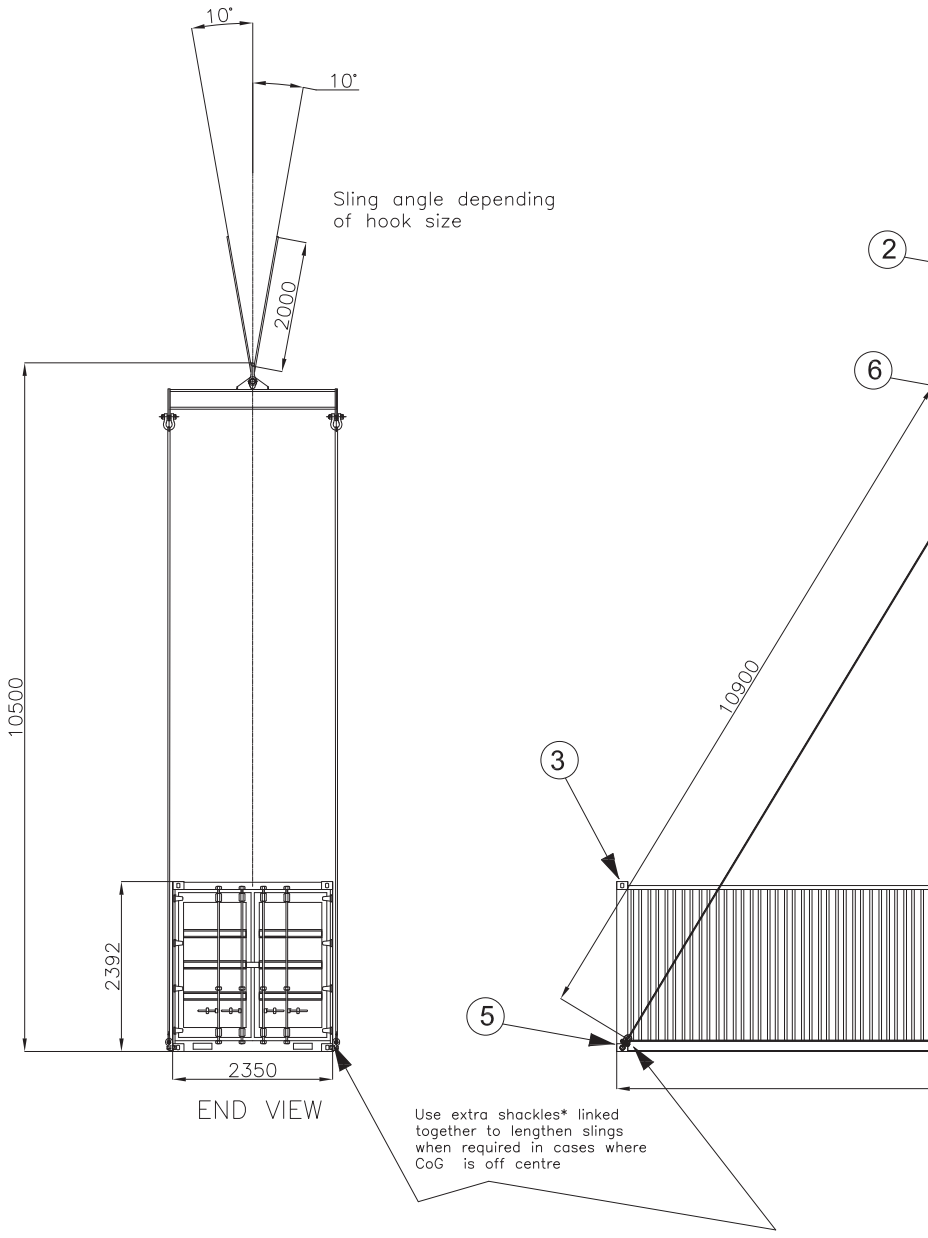

Sling Position:

1) 4 x Container lifting lugs WLL 32.0t (4 peices) @ 50°sling angle
2) 1 x Fibre sling (Basket cinfiguration) EWL 4.0m (EWL 2.0m) WLL 15.0t (30.0t)
3) 1 x ISO container (12.0m) max weight including contents 10.0t
4) 4 x Fibre slings EWL 10.9m WLL 10.0t
5) 4 x Sling shackles WLL 12.0t
6) 1 x Lifting beam EWL 2.55m. WLL 40.0t
7) 1 x Sling shackle WLL 30.0t

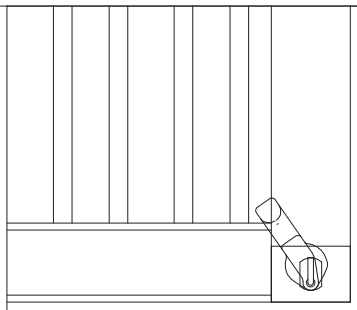



Container Lifting Lug

Per Set of 4

SWL – 32.0t at Max Angle 50° from vertical

SWL – 40.0t at Max Angle 36° from vertical

Application of Container Lifting Lug
Lugs are left and right handed
Left hand shown

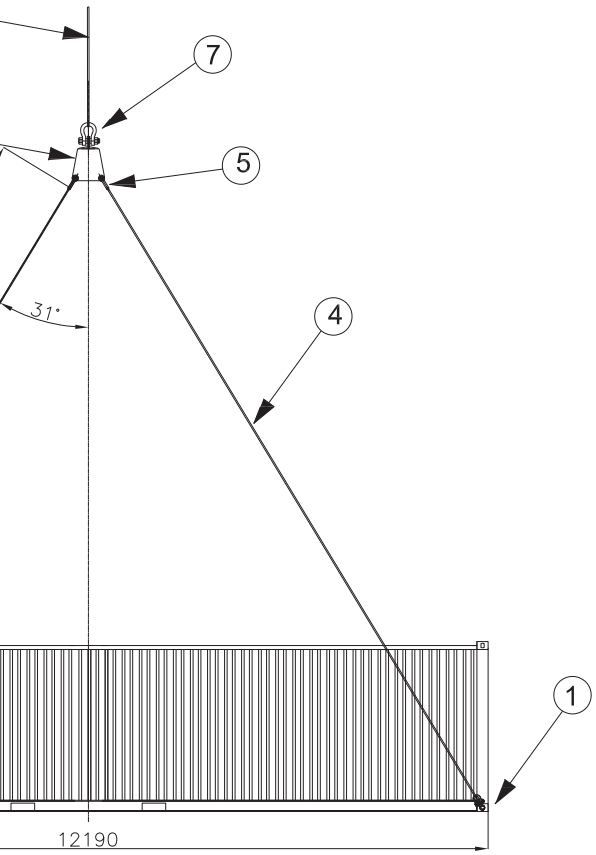

FRONT VIEW

Load container up to MGW 10.0ton max.

Regarding Weight distribution in container:
Position of Center of gravity (COG), to be max 600mm away from center of container.

Note:
This drawing has been produced for training purposes only.

Scale/size:	1:50 / A2	The shown drawing scale is for printing only. ACAD scale: 1 drawing unit = 1 mm	
Issued Date:	07/05/2019	Rigging Doc. No.:	CNTR-SMP-DWG-01A
Issued By:	XXX	Title:	**Rigging arrangement 40ft container - fibre slings**
Subject:	Rigging	Drw. No:	**CNTR-SMP-DWG-01A**

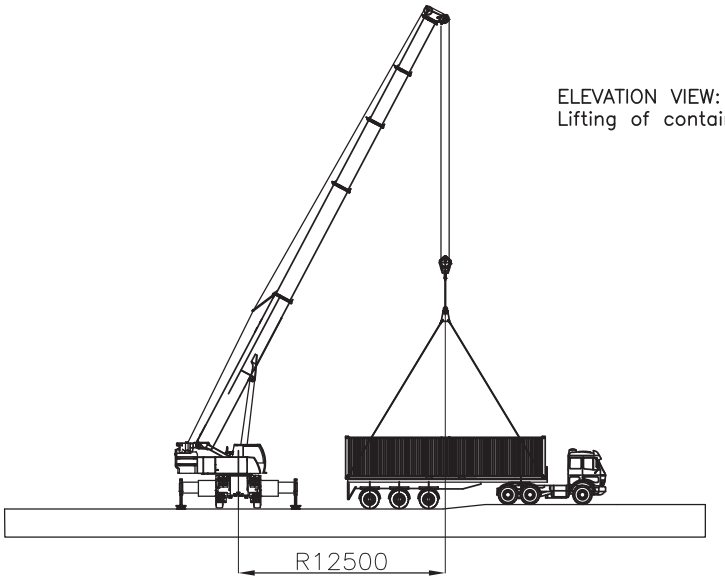

ELEVATION VIEW:
Lifting of container from transport

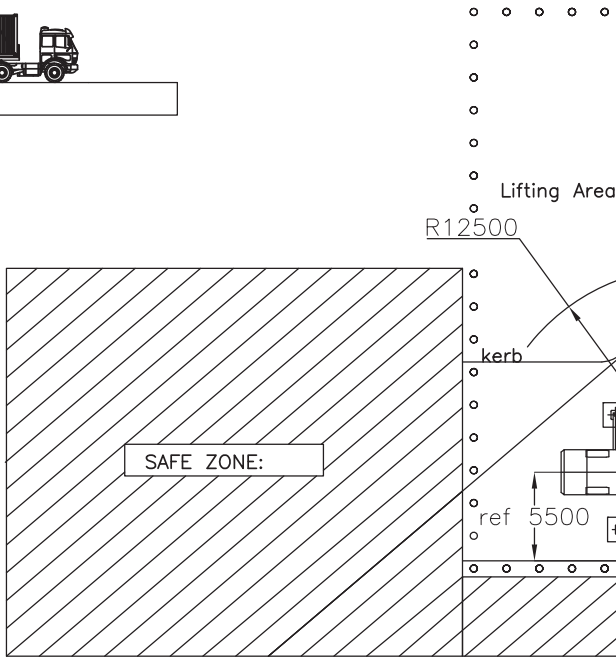

PLAN VIEW:
Lifting of container from transport
placement into laydown position.

ELEVATION VIEW:
Placement of container into laydown position

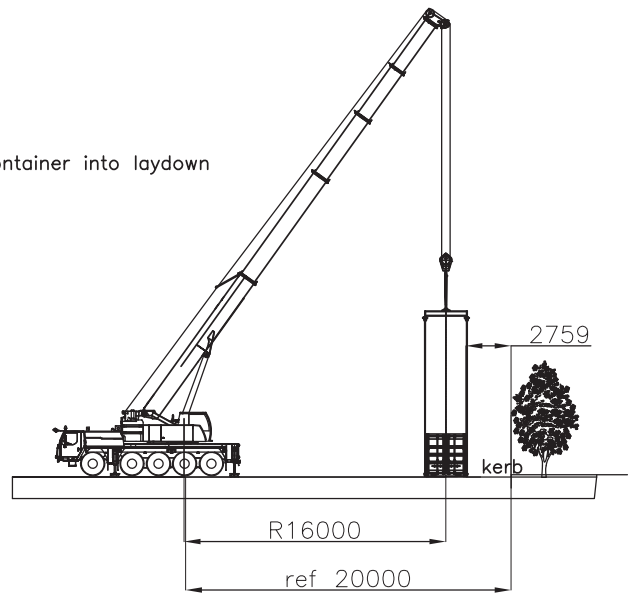

CRANE DETAIL

Type: Liebherr LTM 1095–5.1
Capacity: 95.0t
Counterweight: 23.0t
Main Boom Length: 29.2m
Outrigger Centres: 7.3m x 7.0m
Max Outrigger Load: 42.0t
Standard Outrigger Mats: 1.2m diameter
Additional Outrigger Mats: 1.5m x 1.5m
Pressure Under The Mats: 19.0t p/sqm
Permissible Pressure Advised By Client: 25.0t p/sqm

LOAD DETAILS:

Type: 12.0m x 2.5m Shipping Container
Max Load: 10.00t
Rigging: 00.50t
Hookblock: 00.30t
Deduction for fly–jib: 00.31t
Total Load: 11.11t
WCF 10%:(tonnes) 01.12t
Factored Load: 12.23t
Max Radius: 16.00m
Crane Capacity: 14.70t
% Utilisation: 84%

Maximum allowable windspeed: 11m/s 10min mean

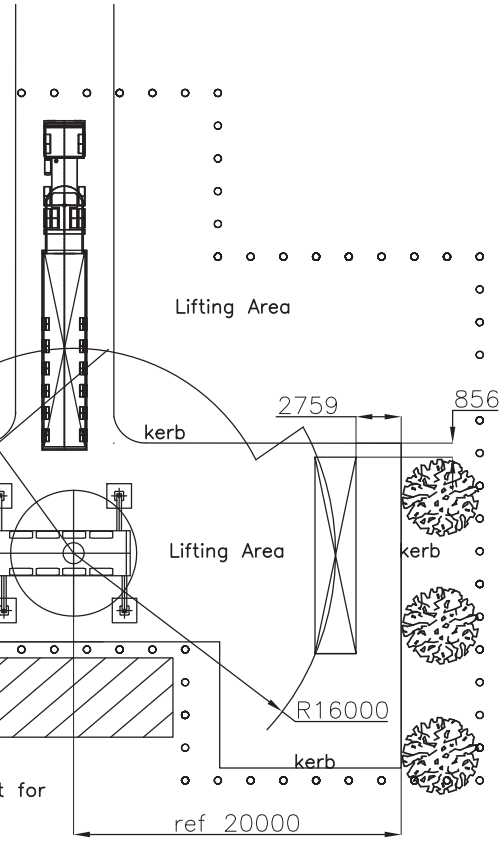

NOTE:
Corden the lift area off. Use 2 x 6.0m taglines to control load orientation.

This drawing has been produced for training purposes only

Scale/size:	1:50 / A2	The shown drawing scale is for printing only. ACAD scale: 1 drawing unit = 1 mm	
Issued Date:	19/03/2020	Plan elevation Doc. No.:	CNTR-SMP-DWG-01
Issued By:	XXX	Title:	**Rigging arrangement 40ft container - fibre slings**
Subject:	Rigging	Drw. No:	**CNTR-SMP-DWG-01**

Risk Assessment and Environmental Impact Assessment O TEM

Doc No:	CNTR-SMP-RA-01			**Risk Assessment: Lifting of 12.0m shipping container**		
Rev No:	0	Issued by:	xxxxx			
Date:	19/03/2010	Approved by:				

Project	Offload Shipping Container
Location	xxxx
Task	Lifting operations with 95t capacity mobile crane

restricted

Prints taken from this document are uncontrolled

Filename: CNTR-SMP-RA- 01 Risk Assessment R00.xlsx

Risk Assessment Criteria - Risk Evaluation Matrix - Restricted

Read this first:

1) Assess the Likelihood of the hazardous event occuring.
2) Assess the severity of the event based on the definitions below.

All of the above is automatically handled by the HSE Risk Register
When using the attached HSE Risk Register start by entering information about the organization and context in which the risk is being identified. Assess the risk by filling in data as guided by the column headlines. The Sustainability Risk Register will automatically give you the Probability of Occurence factor (P) and the Severity of Harm factor (S) based on your input. The Risk Register will automatically multiply (P) with (S) leading to the Risk factor (R).

When evaluating the risk use the Risk Evaluation Matrix:
A risk factor (R) between 1-4 is a Low Risk and an acceptable level. These risks must be kept under review and reduced further wherever reasonably practicable.

A risk factor (R) between 5-11 is a Medium Riskand requires attention. The operation can continue but implementation of Operational Controls (such as work instructions and training) are required in order to reduce the risk to an acceptable level.

A risk factor (R) between 12-25 is a High Risk and the operation must be stopped until Operational Controls are implemented and the risk is reduced to at least a Medium Risk level. With the risk reduced to Medium Level the operation can go on but further controls must be implemented in order to reduce the risk to an acceptable level.

DO NOT:
Do not compare the Severity of Harm criteria with each other. E.g.: A "high" Safety risk cannot be compared to a "high" CSR risk.
However please remember that an identified risk may well have to be assessed using different Subject Assessment Areas (e.g. a chemical spill with a person being injured).

REGARDING CSR AND SECURITY:
Please contact CSR or Security if you identify risks related to these areas in order to implement effective mitigations.

PROBABILITY OF OCCURENCE	SEVERITY OF HARM

Risk Criteria Matrix

Likelihood of the hazardous event occuring	1. Slight	
1) **Very Unlikel**y: At least annually	1	
2) **Unlikely**: At least Quarterly	2	
3) **Possible:** At least Monthly	3	
4) **Likely:** At least Weekly	4	
5) **Very Likely:** At least daily	5	

Subject Assessment Area	1. Slight	
Safety	First Aid Injury or less	Rest Med
Health and Occupational Illness	No or only slight negative effect on health condition. No permanent disorder. Possible illness/disease where no objective evidence of functional impairment is demonstrable, or where diagnosis is uncertain. The possible disease will not result in a permanent disorder This may be diagnosed without objective evidence or external verification.	Min heal perm illne obje func pres outs dise perm requ i.e. x test, labo This by th prac

Restricted
Prints taken from this document are uncontrolled

Filename:

2. Low	3. Medium	4. High	5. Serious
2	3	4	5
4	6	8	10
6	9	12	15
8	12	16	20
10	15	20	25

SEVERITY OF HARM			
2. Low	**3. Medium**	**4. High**	**5. Serious**
ricted Work lical Treatment Injury	Lost Time Injury	Serious Injury	Fatality
or negative effect on th condition. No manent disorder. Early ss/disease where ctive evidence of tional impairment is ent i.e. a test result falls ide normal range. The ase will not result in a manent disorder. This uires objective evidence x-rays, lung function skin patch testing, ratory confirmed etc. diagnosis may be made he plant medical titioner or local doctor.	Permanent negative effect on health condition. Early illness/disease where objective evidence of functional impairment is present i.e. a test result falls outside normal range. The disease will result in a permanent disorder. This requires objective evidence i.e. x-rays, lung function test, skin patch testing	Serious and permanent negative effect on health condition. Advanced illness/disease where permanent functional impairment is severe or disabling interfering with social and employment activity. Condition is externally verified by relevant specialist or equivalent If significant doubt exists regarding occupational exposure then it should be classified as medium.	Life-threatening and permanent negative effect on health condition. Fatal or life threatening illness/disease Condition is externally verified by relevant specialist or equivalent.

CNTR-SMP-RA- 01 Risk Assessment R00.xlsx

Doc No:	CNTR-SMP-RA-01		
Rev No:	0	Issued by:	
Date:	19/03/2019	Approved by:	

Classify the risk assessment for task and add the risk that apply to that task.
1. Make a small description of the task
2. Apply the risk specific for the task

Activity	Circumstance	Description of Hazard	Risk Assessment
			Likelihood
Working on construction site	Unfamiliarity with site procedures:	Fatality or Major Injury, Suspension Trauma, Disablement Injuries, Minor Injuries	**3) Possible: At least daily**
Working on construction site	Incorrect PPE for task	Working on site. Dropped items, Serious to fatal injury.	**4) Likely: At least Weekly**
Lifting of equipment	Adverse weather moving load	Adverse weather, shifting load, high winds, lightening. Fog. Severe injury, fatality, severe damage to components.	**4) Likely: At least Weekly**
Lifting of equipment	crane failure	Failure of equipment, poor maintenance and failure to report defects. Severe injury, fatality, severe damage to components and vessel. Suspended loads.	**4) Likely: At least Weekly**

Risk Assessment: Lifting Operations-95t capacity mobile crane

xxxxxxxx

				Residual Risk Level	
Severity	**Risk**	**Methods to eliminate/reduce**	**Likelihood**	**Severity**	**Risk**
4	**12**	All personnel working on site must be given an induction by an authorised member of the site personnel to ensure they understand the emergency and working procedures. A tool box talk must be held with all personnel involved in lifting operations to ensure all personnel are aware of their responsibilities, highlight all risks and decide on the communication methods to be used. All communication made during lifting operations to be in English. Standard PPE requirements to be adhered to at all times when on the vessel deck area.	**2) Unlikely: At least Quarterly**	**4**	**8**
3	**12**	Minimum approved required PPE including safety helmet, safety shoes, Hi-Viz and safety glasses to be worn at all times.	**2) Unlikely: At least Quarterly**	**3**	**6**
4	**16**	Do not operate thecrane beyond their maximum permissible working wind speed. Refer to forecast when planning days lifting activity's. Refer to forecast when planning and performing days lifting activities. Check regular updates on forecast. Cease lifting operations if the weather deteriorates to an unsafe level. I.e.. Poor vision of load. Use anemometers for accurate wind readings prior to and during operations. Refer to allowable wind working wind speed table in the lifting plan prior to attempting to lift any loads to ensure that the correct maximum allowable wind speed is not exceeded. Lifting operations MUST cease when the operational limit is approached. Do not perform lifts when there is a risk of thunder and lightning. Agreed lightning procedure beween site and crane supervisor is to be followed.	**2) Unlikely: At least Quarterly**	**4**	**8**
5	**20**	Only personnel with specific training on the machine type will be allowed to operate the crane. Daily/ Weekly checks to be made on the equipment at the start of each day & week. Equipment should be maintained and inspected in accordance with the manufacturer's recommendations. All defects must be reported immediately and where the defect affects the safe operation of the equipment it MUST be put out of service until the defect is rectified. All lifting equipment will be subject to mandatory inspection with valid certificates of Conformity / Thorough Examination readily available. Do not position yourself or others under suspended load. Keep distance between you and load as far apart as reasonably possible	**2) Unlikely: At least Quarterly**	**5**	**10**

Activity	Circumstance	Description of Hazard	Risk Assessment
			Likelihood
Lifting of equipment	crane working without signal	Communication failure loss of communications, miss understood instruction. Leading to incorrect crane operations / manoeuvres Severe injury, fatality due to crushing, severe damage ..	**4) Likely: At least Weekly**
Lifting operations	Manual handling	Rigging of accessories and use of tools. Minor to serious injury to the person, sprains and strains. Use of taglines	**4) Likely: At least Weekly**
Lifting operations	Poor Housekeeping	Trailing cables and hoses, oil spills. Lifting accessories left outside. Slips, Trips & Falls. Minor to serious injury to the person.	**2) Unlikely: At least Quarterly**
Lifting operations	Public Entering lifting area	Public entering into the works area. Public suffering injury due to gaining entry into the work area.	**2) Unlikely: At least Quarterly**

			Residual Risk Level		
Severity	Risk	Methods to eliminate/reduce	Likelihood	Severity	Risk
4	16	All operations to be controlled by a supervisor. Designated radio channel identified in TBT. All communications to be in English. Communications to be checked prior to commencement of operations. Spare radios to be available. The Operator should not manoeuvred the equipment without instruction from a Signaller. Continual radio communication between supervisor/Signaller and operator. When using more than one Signaller ensure that hand over from each of the signallers is clear and understood by the operator. Operations MUST cease if communication-failure. Use recognised signals as in BS7121.	**1) Very Unlikely: At least annually**	4	4
3	9	Hierarchy of lilting implemented. User T.I.L.E. Task-Individual-Load-Environment to assess the item. Where possible the requirement to manual handle shall be eliminated by making use of mechanical means such as cranes, hoists. Use shall be made of Kinetic Lifting Techniques. Where lifting, pushing and pulling cannot be avoided assessment shall identify a safe system of work which shall include the use of more than one person to carry out the required operation. Suitable periods of work and rest in order to prevent fatigue shall be planned into all operations. Ensure loose taglines do not have knots in them. Keep lines free from twists. Do not wrap around body or other body parts. Use taglines suitable for the task. Only use equipment that you trained to do so.	**2) Unlikely: At least Quarterly**	3	6
3	6	Keep work area of all loose objects prior to commencing lifting operation. Landing for loads must checked be cleared before craning commences. All tripping obstructions to be cleared from work area. Do not block paths and walkways; these must be kept clear at all times. All personnel to be aware of their surroundings and workplace. All spillages are to have immediate area cordoned off and area cleaned. No running . Ensure all lifting accessories and are placed in container after use.	**1) Very Unlikely: At least annually**	3	3
4	7	The areas in which the lifting operation shall be completely barriered off to prevent the public gaining access. Warning signs shall be displayed at prominent places warning the public of danger from lifting operations. The lifting operations shall be halted immediately if any member of the public gains access inside the barriered area. Only members of the lifting operations team shall be permitted within the barriered area. Particular attention to be paid to the presence of children.	**1) Very Unlikely: At least annually**	4	4
	0				0
	0				0
	0				0
	0				0
	0				0
	0				0
	0				0
	0				0
	0				0
	0				0
	0				0
	0				0
	0				0